aroTHERM pro

VWL 55/7.1 A 230V S2
VWL 75/7.1 A 230V S2
VWL 115/7.1 A 230V S2

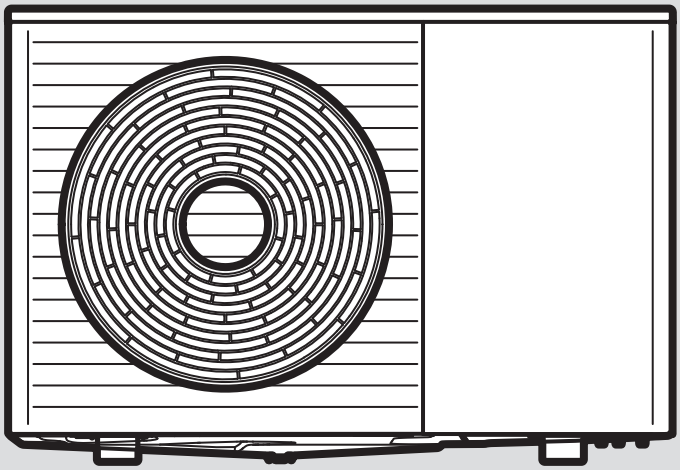

8000026885_02 - 01.07.2026

en Installation and maintenance instructions

Installation and maintenance instructions

Contents

1 Safety ... 4
1.1 Intended use ... 4
1.2 Qualification ... 4
1.3 General safety information ... 4
1.4 Regulations (directives, laws, standards) ... 6
2 Notes on the documentation ... 7
2.1 Documents ... 7
2.2 Validity of the instructions ... 7
2.3 Further information ... 7
3 Product description ... 7
3.1 Heat pump system ... 7
3.2 Description of the product ... 7
3.3 Noise reduction mode ... 7
3.4 Functions of the heat pump ... 7
3.5 Product design ... 8
3.6 Information on the data plate ... 10
3.7 Connection symbols ... 10
3.8 Warning sticker ... 10
3.9 CE marking ... 10
3.10 UKCA mark ... 11
3.11 Benchmark ... 11
3.12 Application limits ... 11
3.13 De-icing mode ... 12
3.14 Safety devices ... 12
4 Protective zone ... 12
4.1 General information ... 12
4.2 Protective zone with deactivated Flexible Space Function ... 13
4.3 Protective zone with activated Flexible Space Function ... 17
5 Set-up ... 21
5.1 Checking the scope of delivery ... 21
5.2 Transporting the product ... 21
5.3 Views and dimensions ... 21
5.4 Complying with minimum clearances ... 22
5.5 Conditions for the installation type ... 23
5.6 Selecting the installation site ... 23
5.7 Permissible height difference between the outdoor unit and the expansion relief valve in the heating circuit ... 24
5.8 Preparing for set-up and installation ... 25
5.9 Planning the condensate discharge ... 25
5.10 Planning the foundation ... 26
5.11 Creating a foundation ... 26
5.12 Loosening the product from the pallet ... 26
5.13 Guaranteeing occupational safety ... 26
5.14 Installing the product ... 27
5.15 Ensuring condensate discharge ... 27
5.16 Setting up a protective wall ... 27
5.17 Removing/installing the casing sections ... 27
5.18 Installing the casing sections ... 28
6 Hydraulics installation ... 28
6.1 Installation type: Direct connection or system separation ... 28
6.2 Guaranteeing the minimum circulation water volume ... 28
6.3 Requirements for hydraulic components ... 28
6.4 Preparing the hydraulics installation ... 28
6.5 Routing pipelines to the product ... 28
6.6 Connecting the pipelines to the product ... 29
6.7 Completing the hydraulics installation ... 29
6.8 Connecting the product to a swimming pool ... 29
7 Electrical installation ... 29
7.1 Preparing the electrical installation ... 30
7.2 Requirements for the quality of the mains voltage ... 30
7.3 Requirements for electrical components ... 30
7.4 Electrical partition ... 30
7.5 Removing the cover for the electrical connections ... 30
7.6 Stripping the electrical wire ... 30
7.7 Establishing the power supply ... 30
7.8 Connecting the communication cable ... 32
7.9 Connecting accessories ... 32
7.10 Installing the cover for the electrical connections ... 32
8 Start-up ... 32
8.1 Checking before switching on ... 32
8.2 Checking and treating the heating water/filling and supplementary water ... 32
8.3 Filling and purging the heating circuit ... 33
8.4 Operating the product ... 34
8.5 Guaranteeing frost protection ... 34
8.6 Available remaining feed pressure ... 34
9 Handing over to the user ... 34
9.1 Instructing the end user ... 34
9.2 Switching on the product ... 34
10 Troubleshooting ... 34
10.1 Fault messages ... 34
10.2 Other faults ... 34
11 Inspection and maintenance ... 34
11.1 Preparing for inspection and maintenance ... 34
11.2 Observing the work plan and intervals ... 35
11.3 Procuring spare parts ... 35
11.4 Carrying out maintenance work ... 35
11.5 Completing inspection and maintenance ... 36
12 Repair and service ... 36
12.1 Preparing repair and service work on the refrigerant circuit ... 36
12.2 Removing refrigerant from the product ... 37
12.3 Removing components of the refrigerant circuit ... 37

12.4 Filling the product with refrigerant 38
12.5 Installing components of the refrigerant circuit 38
12.6 Completing repair and service work 38
13 Decommissioning 38
13.1 Temporarily decommissioning the product..... 38
13.2 Permanently decommissioning the product..... 38
14 Recycling and disposal 39
14.1 Disposing of the packaging 39
14.2 Disposing of the refrigerant 39
15 Customer service..... 39
15.1 Customer service..... 39
Appendix 40
A Available remaining feed pressure 40
B Functional diagram..... 43
C Safety devices 45
D Wiring diagram..... 47
D.1 Wiring diagram, power supply 47
D.2 Wiring diagram, sensors and actuators 48
E Technical data 49
F Commissioning Checklist..... 52
Index 57

1 Safety

1.1 Intended use

There is a risk of injury or death to the user or others, or of damage to the product and other property in the event of improper use or use for which it is not intended.

The product is the outdoor unit of an air-to-water heat pump with monoblock design.

The product uses the outdoor air as a heat source and can be used to heat/cool a residential building and for domestic hot water generation.

The intended use only allows for these product combinations:

Outdoor unit	Indoor unit
VWL ..5/7.1 A ..	VIH QW 190/7 ..
	VWZ MH 97/7
	VWZ MEH 97/7
	VWZ AI /7 230V

The air that escapes from the product must be able to flow out freely, and must not be used for any other purposes.

The product is only intended for outdoor installation.

The product is intended exclusively for domestic use.

Intended use includes the following:

- observance of accompanying installation and maintenance instructions for the product and any other system components
- installing and setting up the product in accordance with the product and system approval
- compliance with all inspection and maintenance conditions listed in the instructions.

Intended use also covers installation in accordance with the IP code.

Any other use that is not specified in these instructions, or use beyond that specified in this document, shall be considered improper use. Any direct commercial or industrial use is also deemed to be improper.

Caution.

Improper use of any kind is prohibited.

1.2 Qualification

1.2.1 General qualifications

The following work must only be carried out by competent persons who are sufficiently qualified to do so:

- Set-up
- Dismantling
- Installation
- Start-up
- Inspection and maintenance
- Repair
- Decommissioning

▸ Proceed in accordance with current technology.

1.2.2 Qualification for R290 refrigerant

Any activity that requires the unit to be opened must only be carried out by sufficiently qualified persons who have knowledge about the particular properties and risks of refrigerant.

Specific expert refrigeration qualifications in compliance with the local laws is required when carrying out work on the refrigerant circuit. This also includes specialist knowledge about handling flammable refrigerants, the corresponding tools and the required personal protective equipment.

▸ Comply with the corresponding local laws and regulations.

▸ Note that the refrigerant is odourless.

1.2.3 Qualification for electrical installation

Work on the electrical system and electrical equipment must only be carried out by qualified electricians who are sufficiently trained to do so.

1.3 General safety information

The following sections convey important safety information. It is essential to read and observe this information in order to prevent risk of death, risk of injury, material damage or environmental damage.

1.3.1 R290 refrigerant

The product contains the refrigerant R290.

In the event of a leak, escaping refrigerant may mix with air to form a flammable atmo-

sphere. In conjunction with a source of ignition, there is a risk of fire and explosion.

In the event of a leak, escaping refrigerant may collect on the floor and a suffocating or toxic atmosphere may form. There is a risk of suffocation and poisoning.

Note that the refrigerant is odourless.

Storage

- Only store the unit in rooms with no permanent ignition sources. Examples of such ignition sources include naked flames, a gas-fired boiler that is switched on, or an electric heater.
- Ensure that the refrigerant cannot deliberately get into the waste-water system.

Transport

- During transport, never tilt the product by any more than the 45°.

Installation

- Please note that a protective zone is defined around the product. See section "Protective zone".

Installation and maintenance

- If you are working on the product when it is open, before starting work, use a gas sniffer to ensure that there is no leak.
- The gas sniffer itself must not be an ignition source. The gas sniffer must be calibrated to R290 refrigerant and set to ≤ 25% of the lower explosive limit.
- Keep all ignition sources, be they temporary or permanent, away from the product. Ignition sources are, for example, open flames, electrical systems, plug sockets, lamps, light switches, electrical utility connections, hot surfaces with temperatures above 370 °C, electrical devices or tools that are not free of ignition sources, or static discharges.
- Note that escaping refrigerant has a higher density than air, and may collect near the ground.
- ▸ Ensure that the escaping refrigerant does not collect in a recess.
- Ensure that the escaping refrigerant cannot get inside the building via building openings.
- Never make any changes to the product where these involve drilling into the product.

Repair

- Wear suitable personal protective equipment and bring a fire extinguisher with you.
- Only use tools and units that are permitted for the refrigerant and are in proper working condition.
- Ensure that no air gets into the refrigerant circuit, into refrigerant-carrying tools or units, or into the refrigerant cylinder.
- Note that the refrigerant must never be introduced into the waste-water system.

Decommissioning

- Drain the indoor unit on the heating water side in order to prevent damage due to ice formation.

Recycling and disposal

- Extract the refrigerant that is contained in the product fully into a suitable vessel.
- Arrange for the refrigerant to be recycled or disposed of by certified competent persons in accordance with regulations.

1.3.2 Electricity

There is a risk of death from electric shock if you touch live components.

Before commencing work on the product:

- Disconnect the product from the power supply by switching off all power supplies at all poles (electrical partition in overvoltage category III for full partition, e.g. fuse or circuit breaker).
- Secure against being switched back on again.
- Wait at least three minutes until the condensers have discharged.
- Check that there is no voltage.

1.3.3 Hot or cold components

There is a risk of burns and frostbite from some components, particularly uninsulated pipelines.

- Only carry out work on the components once these have reached environmental temperature.

Due to the surface colour, the surface can heat up in direct sunlight and cause burns if touched.

- Do not touch the surface if the outdoor unit is exposed to direct sunlight for a long period of time.
- Only touch the surface if you can ensure that the surface is not hot. If necessary, wait until the outdoor unit is no longer exposed to direct sunlight and the surface has cooled down.

1.3.4 Installation site

- Ensure that the installation surface has sufficient load-bearing capacity to bear the total weight of the product.
- Ensure that the product is aligned horizontally.
- Ensure that you do not damage the heat insulation on the pipelines in order to prevent condensation.
- Ensure that the anti-vibration feet used are firmly attached to the installation surface.
- Ensure that the product is screwed to the anti-vibration feet.

1.3.5 Tools and materials

To prevent material damage:

- Only use appropriate tools.
- Only use special copper pipes as pipelines for the refrigerant for the refrigeration technology.

1.3.6 Weight

To prevent injuries when transporting the product:

- Take note of the product weight.
- Make sure that the product is transported by a sufficient number of people given the product weight.
- Use suitable transport and lifting equipment, in accordance with your job safety analysis.
- Use suitable personal protective equipment: Gloves, safety footwear, protective goggles, protective helmet.

1.3.7 Safety devices

- Install the necessary safety devices in the installation.
- Observe the applicable national and international laws, standards and directives.
- Ensure that the heating installation is in a technically perfect condition.
- Ensure that no safety or monitoring devices have been removed, bridged or disabled.
- Immediately eliminate any faults and damage that may affect safety.

1.3.8 Hydraulics installation

The use of glycol or other substances that alter the viscosity of the water is not permitted in a direct connection where the outdoor and indoor units use the same fluid.

The use of glycol is only permitted when using a system separator.

1.4 Regulations (directives, laws, standards)

- Observe the national regulations, standards, directives, ordinances and laws.

2 Notes on the documentation

2.1 Documents

- ► Always observe all the operating and installation instructions included with the system components.
- ► Pass these instructions and all other applicable documents on to the end user.

2.2 Validity of the instructions

These instructions apply only to:

Product	Article number	Country
VWL 55/7.1 A 230V S2	8000022167	GB, IE
VWL 75/7.1 A 230V S2	8000022183	
VWL 155/7.1 A 230V S2	8000022196	

2.3 Further information

- ► Scan the displayed code using your smartphone in order to view further information about your product.
  - ◁ You are guided to the Internet portal.

3 Product description

3.1 Heat pump system

Design of a typical heat pump system with monoblock technology:

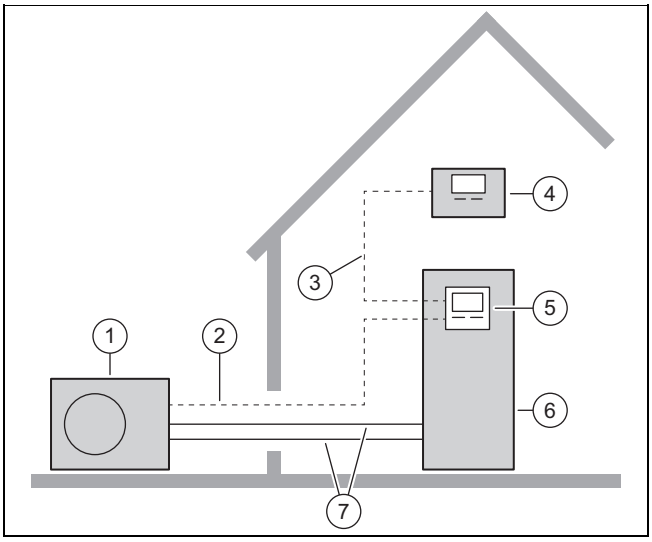

1	Outdoor unit	5	Control for the indoor unit
2	Communication cable	6	Indoor unit with optional domestic hot water cylinder
3	eBUS line	7	Heating circuit
4	System control		

3.2 Description of the product

The product is the outdoor unit of an air-to-water heat pump with monoblock technology.

3.3 Noise reduction mode

The product has a noise reduction mode function.

In noise reduction mode, the product operates more quietly than in normal operating mode. This is achieved using a limited compressor rotational speed and an adjusted fan speed. Consequently, the heat output or cooling output provided by the unit is reduced.

It is activated and operated via the indoor unit's control and the system control.

3.4 Functions of the heat pump

The heat pump has a closed refrigerant circuit in which refrigerant circulates.

In heating mode, cyclic evaporation, compression, condensation and expansion take in heat energy from the surroundings and transfer it to the building. In cooling mode, heat energy is extracted from the building and released into the environment.

3.4.1 Operating principle in heating mode

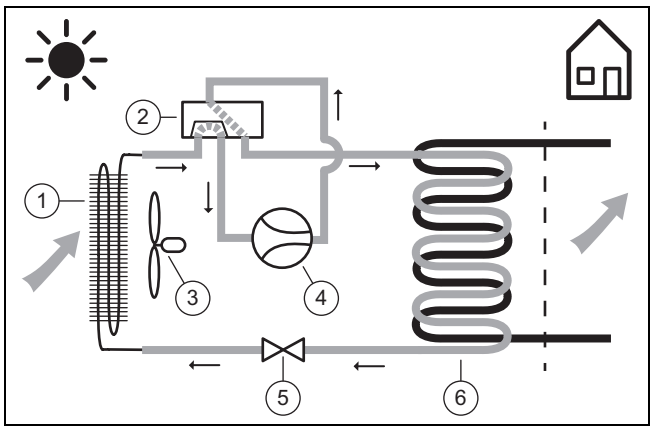

1	Evaporator	4	Compressor
2	4-port diverter valve	5	Expansion valve
3	Fan	6	Condenser

3.4.2 Operating principle in cooling mode

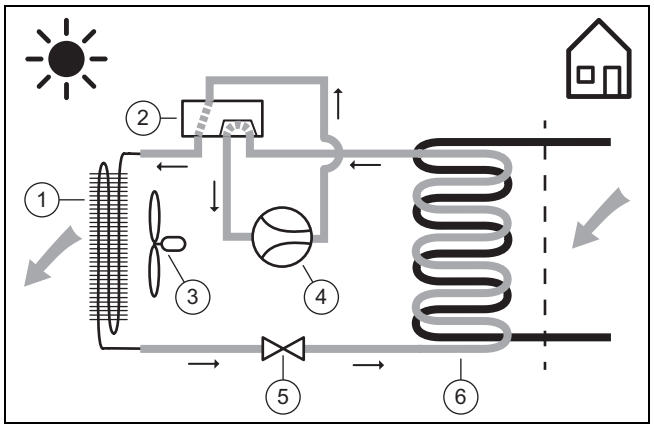

1	Condenser	3	Fan
2	4-port diverter valve		

4	Compressor	6	Evaporator
5	Expansion valve		

3.5 Product design

3.5.1 Unit

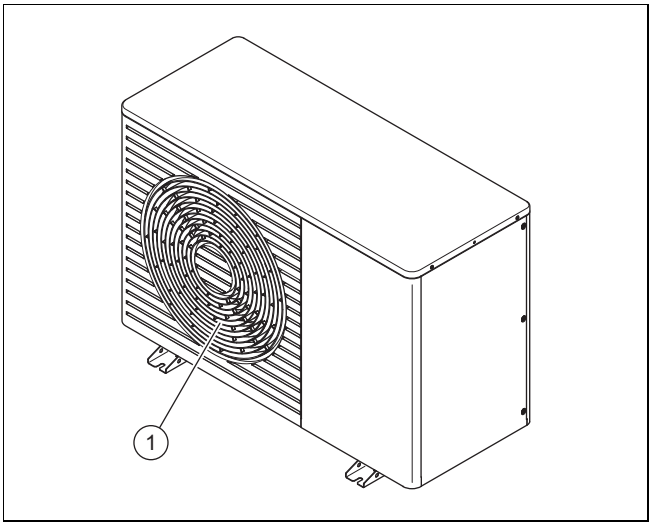

1 Air outlet grille

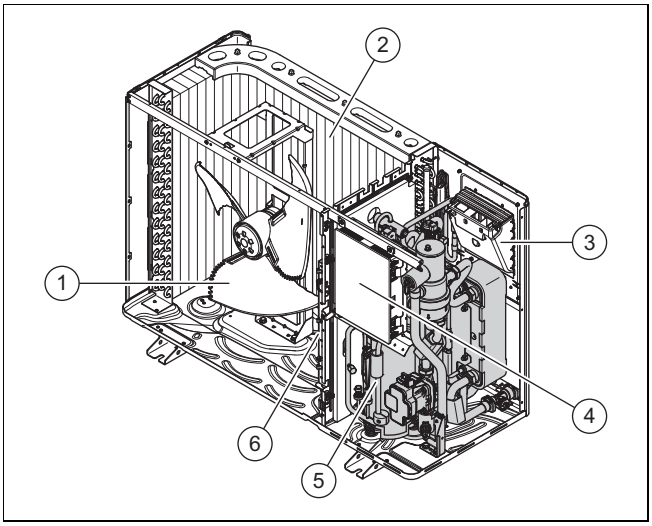

1	Fan	4	HMU PCB
2	Evaporator	5	Compressor assembly
3	INSTALLER BOARD PCB	6	INVERTER assembly

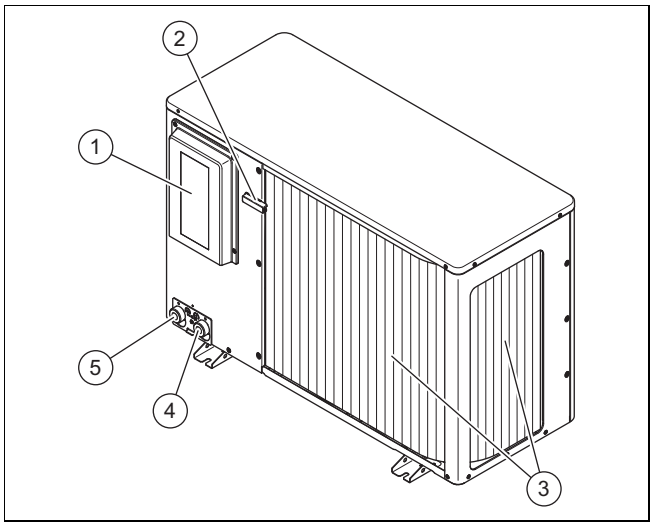

1	Cover for the electrical connections	4	Connection for heating flow, G 1 1/4″
2	Temperature sensor at the air inlet	5	Connection for heating return, G 1 1/4″
3	Evaporator		

3.5.2 Compressor assembly, front view

Validity: VWL 55 OR VWL 75

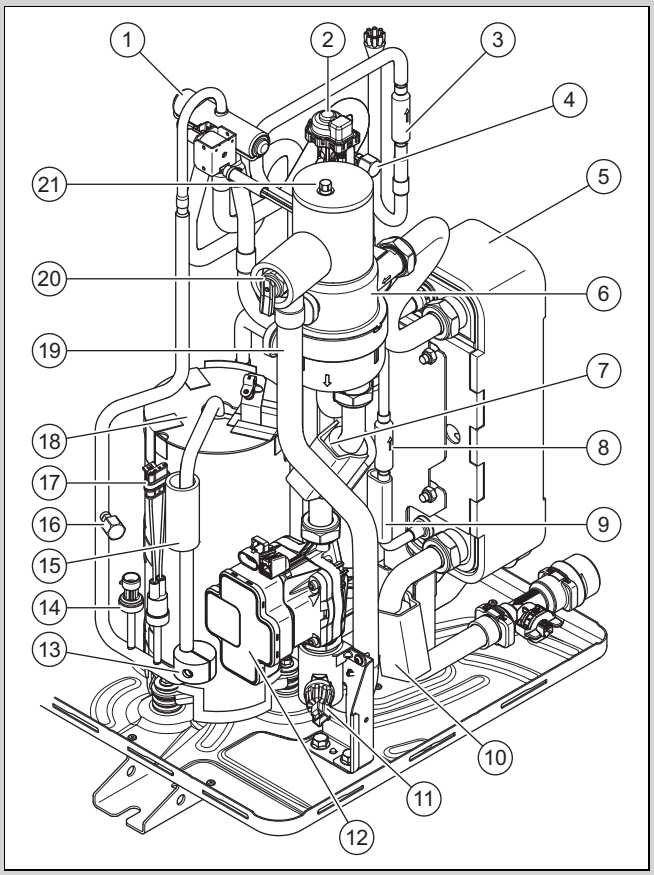

1	4-port diverter valve	7	Flow temperature sensor for the hydraulics
2	Electronic expansion valve	8	Filter
3	Filter	9	Refrigerant temperature sensor
4	Maintenance connection in the low-pressure area	10	Return temperature sensor for the hydraulics
5	Condenser		
6	Refrigerant separator		

11	Pressure sensor for the hydraulics	16	Maintenance connection in the high-pressure area
12	Heating pump	17	Pressure switch
13	Counterweight	18	Compressor
14	Pressure sensor in the high-pressure area	19	Drain hose for the expansion relief valve
15	Refrigerant temperature sensor in the high-pressure area	20	Expansion relief valve
		21	Automatic air vent

Validity: VWL 115

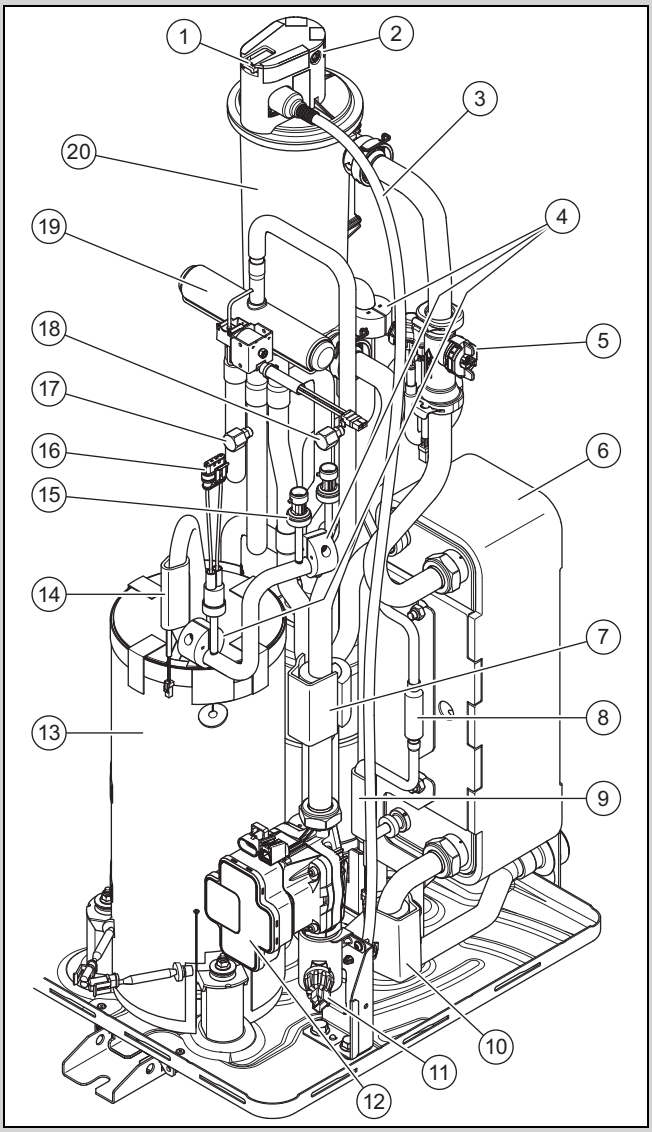

1	Expansion relief valve	10	Return temperature sensor for the hydraulics
2	Automatic air vent	11	Pressure sensor for the hydraulics
3	Drain hose for the expansion relief valve	12	Heating pump
4	Counterweight	13	Compressor
5	Flow rate sensor	14	Refrigerant temperature sensor in the high-pressure area
6	Condenser	15	Refrigerant pressure sensor in the high-pressure area
7	Flow temperature sensor for the hydraulics	16	Pressure switch
8	Filter	17	Maintenance connection in the low-pressure area
9	Refrigerant temperature sensor in the low-pressure area		

18	Maintenance connection in the high-pressure area	19	4-port diverter valve
		20	Refrigerant separator

3.5.3 Compressor assembly, rear view

Validity: VWL 55 OR VWL 75

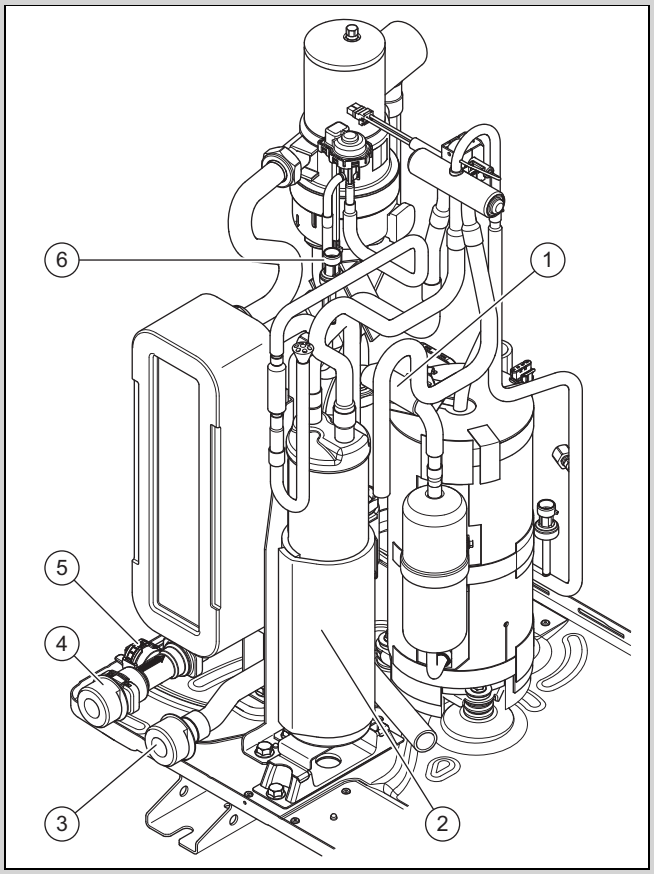

1	Refrigerant temperature sensor in the low-pressure area	4	Connection for heating return
2	Refrigerant buffer vessel	5	Flow rate sensor
3	Connection for heating flow	6	Pressure sensor in the low-pressure area

3.5.3.1 Components, compressor

Validity: VWL 115

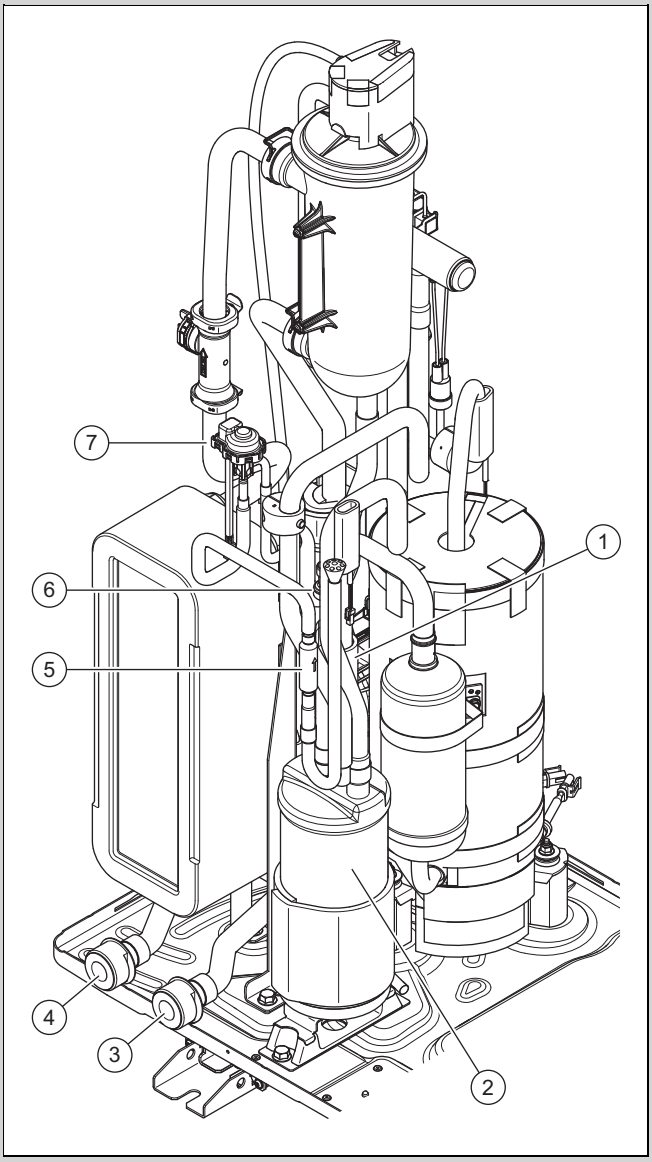

1	Refrigerant temperature sensor in the low-pressure area	4	Connection for heating return
2	Refrigerant buffer vessel	5	Filter
3	Connection for heating flow	6	Refrigerant pressure sensor in the low-pressure area
		7	Electronic expansion valve

3.6 Information on the data plate

The first data plate is located on the rear of the product.

Information	Meaning
Serial no.	Unique unit identification number
VWL ...	Nomenclature
IP	Protection class
P max	Rated power, maximum

A second data plate is located inside the product on the electronics box. It becomes visible when the top casing and front casing are removed.

Information	Meaning
	Compressor
	Control
I max	Rated current, maximum
I	In-rush current
MPa (bar)	Permissible operating pressure
	Refrigerant circuit
R290	Refrigerant type
GWP	Global Warming Potential
kg	Fill quantity
t CO_2	CO_2 equivalent
Ax/Wxx	Air inlet temperature x °C and heating flow temperature xx °C
COP /	Coefficient of performance/heating mode
EER /	Energy efficiency ratio/cooling mode

3.7 Connection symbols

Symbol	Connection
	Heating flow, from the outdoor unit to the indoor unit
	Heating return, from the indoor unit to the outdoor unit

3.8 Warning sticker

Safety-relevant stickers are affixed to several points on the product. The warning stickers include rules of conduct for the R290 refrigerant. The warning stickers must not be removed.

Symbol	Meaning
A3 R290	Warning against flammable materials in conjunction with R290 refrigerant.
	Read the instructions.
	Safety warning, read the instructions.
	Service information, read the instructions.

3.9 CE marking

The CE marking shows that the products comply with the basic requirements of the applicable EU laws as stated on the Declaration of Conformity.

The Declaration of Conformity can be viewed at the manufacturer's site.

3.10 UKCA mark

The UKCA marking shows that the products comply with the basic requirements of the applicable UK laws as stated on the Declaration of Conformity.

The Declaration of Conformity can be viewed at the manufacturer's site.

3.11 Benchmark

Vaillant is a licensed member of the Benchmark Scheme.

Benchmark places responsibilities on both manufacturers and installers. The purpose is to ensure that customers are provided with the correct equipment for their needs, that it is installed, commissioned and serviced in accordance with the manufacturer's instructions by a competent person approved at the time by the Health and Safety Executive and that it meets the requirements of the appropriate Building Regulations. The Benchmark Checklist can be used to demonstrate compliance with Building Regulations and should be provided to the customer for future reference.

Installers are required to carry out installation, commissioning and servicing work in accordance with the Benchmark Code of Practice which is available from the Heating and Hotwater Industry Council who manage and promote the Scheme.

Benchmark is managed and promoted by the Heating and Hotwater Industry Council.

For more information visit www.benchmark.org.uk.

3.12 Application limits

The product works between a minimum and maximum outdoor temperature. These outdoor temperatures define the application limits for the heating mode, domestic hot water generation and cooling mode. Operating outside of the application limits leads to the product switching off.

3.12.1 Application limits, heating mode

In heating mode, the product works at outdoor temperatures of -25 °C to 43 °C.

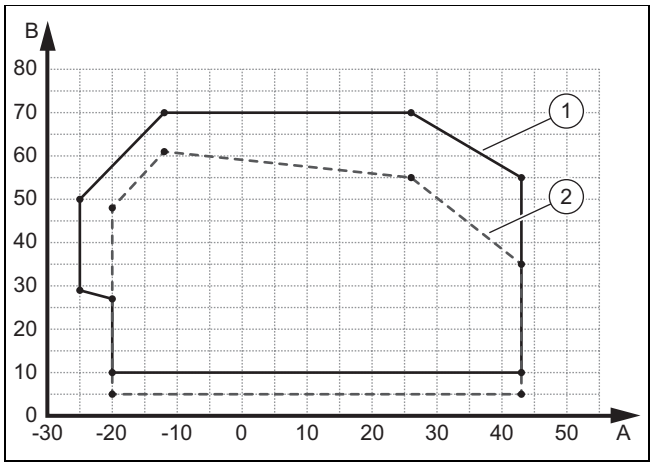

A	Outdoor temperature	2	Application limits, heating start phase
1	Application limits, normal heating operation	B	Heating water temperature

3.12.2 Application limits, domestic hot water generation

For domestic hot water generation, the product works at outdoor temperatures of -22 °C to 44 °C.

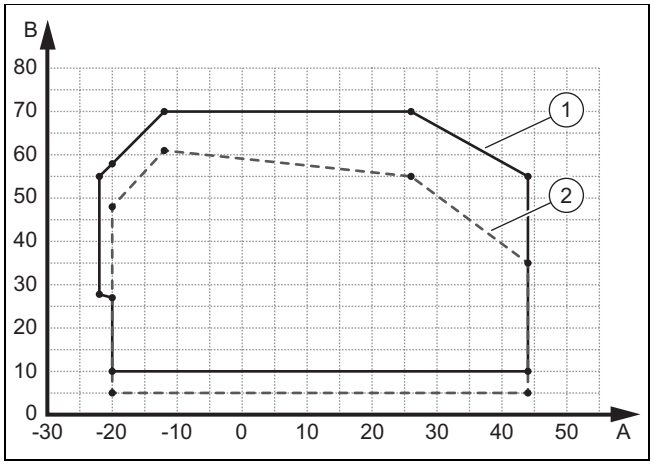

A	Outdoor temperature	2	Application limits, DHW start phase
1	Application limits, normal DHW operation	B	Heating water temperature

3.12.3 Application limits, cooling mode

Validity: Cooling mode activated

In cooling mode, the product works at outdoor temperatures of 15 °C to 46 °C.

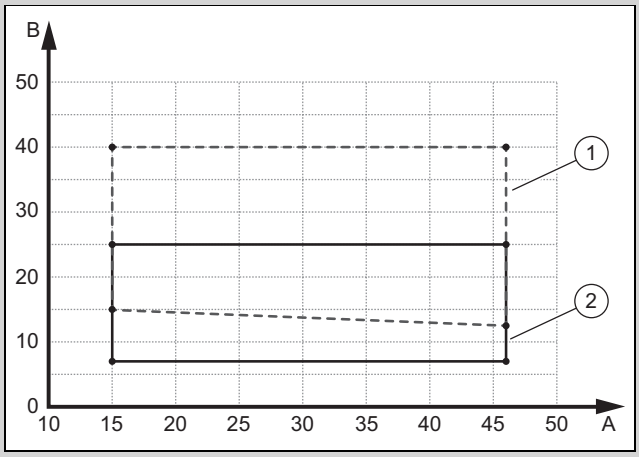

A	Outdoor temperature	B	Heating water temperature
1	Application limits, cooling start phase	2	Application limits, normal cooling operation

3.13 De-icing mode

Fault-free operation in heating and cooling mode is possible without adding additional water (e.g. buffer cylinder). The minimum flow rate must always be guaranteed (e.g. by a bypass valve).

At outdoor temperatures below 5 °C, condensation on the fins of the evaporator may freeze and frost may form in heating mode. This frost is automatically detected and is automatically thawed at certain intervals.

The thawing occurs by reversing the refrigeration circuit while the heat pump is operating. The heat energy that is required for this is taken from the heating installation.

Correct de-icing operation is only possible if the minimum volume of heating water is circulating in the heating installation:

Output of the electric back-up heater	VWL 55	VWL 75
	Minimum volume of heating water	
0.0 kW	25 litres	35 litres
1.0 kW	22 litres	32 litres
1.5 kW	20 litres	30 litres
2.0 kW	17 litres	25 litres
2.5–3.0 kW	15 litres	23 litres
3.5 kW	12 litres	20 litres
4.0–4.5 kW	7 litres	16 litres
5.0 kW	0 litres	12 litres
≥ 5.5 kW	0 litres	0 litres
The values in the table refer to a heating water temperature of 20 °C (at the start of de-icing mode).		

The electric back-up heater is installed in the indoor unit.

Do not use auxiliary equipment to speed up the de-icing process.

3.14 Safety devices

The product is equipped with technical safety devices. See "Safety devices" graphic in the appendix.

If the refrigerant circuit pressure exceeds the maximum pressure of 3.15 MPa (31.5 bar), the pressure switch temporarily switches the product off. Following a waiting time, another attempt is made to start it. After three failed start attempts in succession, a fault message is displayed on the indoor unit's control panel.

When the product is switched off, the crankcase heater switches on if the compressor outlet temperature drops below 7 °C. This prevents possible damage when switching on again.

If the temperature measured at the compressor outlet is higher than the permissible temperature, the compressor is switched off. The permissible temperature depends on the evaporation and condensation temperature.

The pressure in the heating circuit is monitored using a pressure sensor. If the pressure falls below 0.5 bar, a fault shutdown occurs. If the pressure rises to above 0.7 bar, the fault is reset again.

The pressure in the heating circuit is protected using an expansion relief valve. The load relief occurs at 2.5 bar.

The product is equipped with an automatic air vent. This must not be sealed.

The heating circuit's circulation water volume is monitored using a flow rate sensor. If no flow rate can be detected when there is a heat demand when the circulation pump is running, the compressor does not start up.

If the heating water temperature and outdoor temperature fall below 6 °C, the product’s frost protection function is automatically activated as the heating pump is started.

4 Protective zone

4.1 General information

The product contains R290 refrigerant. Note that this refrigerant has a higher density than air. In the event of a leak, escaping refrigerant may collect near the ground.

The refrigerant must not collect in any way that may lead to a dangerous, explosive, suffocating or toxic atmosphere. The refrigerant must not get inside the building via building openings. The refrigerant must not collect in recesses.

A protective zone is defined around the product. There must be no windows, doors, light shafts, cellar entrances, escape hatches, flat-roof windows or ventilation openings in the protective zone.

Follow the national regulations if they are stricter than the explanations listed in this section.

There must be no ignition sources, such as plug sockets, light switches, lamps, electrical switches or other permanent ignitions sources, in the protective zone.

The protective zone must not extend to adjacent buildings or public traffic areas.

In the protective zone, you are not permitted to make any subsequent structural alterations which infringe the stated rules for the protective zone.

Observe the minimum clearance between the rear of the product and the wall (→ Section 5.4). The ground installa-

tion and flat-roof installation types must only be used if the clearance to the wall is > 1.000 mm.

Note

If the required protective zone cannot be maintained for structural reasons, the protective zone can be reduced by activating the Flexible Space function. If the outdoor unit is installed in an area with a smaller protective zone, the Flexible Space function must remain permanently activated and the outdoor unit must be permanently supplied with power (even during prolonged periods of absence). Activating the Flexible Space function slightly reduces the system efficiency and slightly increases the standby energy consumption.

The following sections describe the protective zone depending on the activated or deactivated Flexible Space function. This function can be selected in the installation assistant on the indoor unit's control.

4.2 Protective zone with deactivated Flexible Space Function

The configuration with deactivated Flexible Space function corresponds to the factory setting.

The following sections describe the protective zone with the Flexible Space function deactivated.

Installation method with deactivated Flexible Space function
Free-standing ground installation or flat-roof installation (→ Section 4.2.1)
Installation in front of a building wall (→ Section 4.2.2)
Installation in the right-hand corner of a building (→ Section 4.2.3)
Installation in the left-hand corner of a building (→ Section 4.2.4)
Installation with plinth wall on the right (→ Section 4.2.5)
Installation with plinth wall on the left (→ Section 4.2.6)

4.2.1 Free-standing ground installation or flat-roof installation

The clearance to the wall must be > 1000 mm for the unit to be considered free-standing.

Validity: Installation height < 400 mm

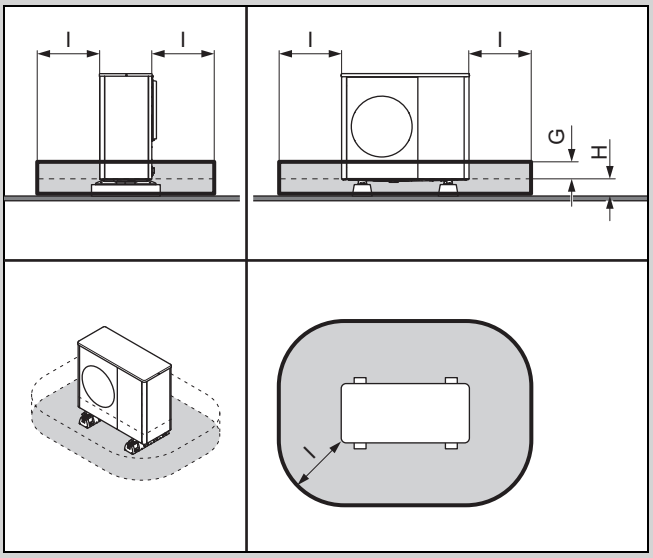

	With or without base cover
G	100 mm
H	< 400 mm
I	1000 mm

Validity: Installation height from 400 to 1000 mm

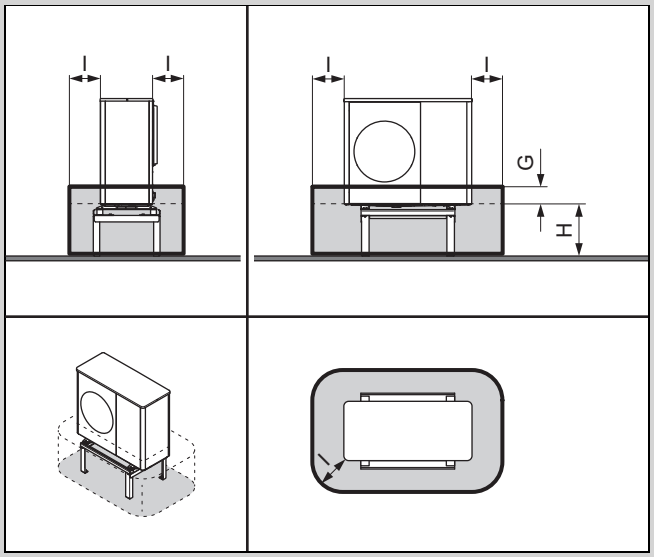

	With or without base cover
G	100 mm
H	400 to 1000 mm
I	500 mm

Suitable for installation with a raised base.

Validity: Installation height > 1000 mm

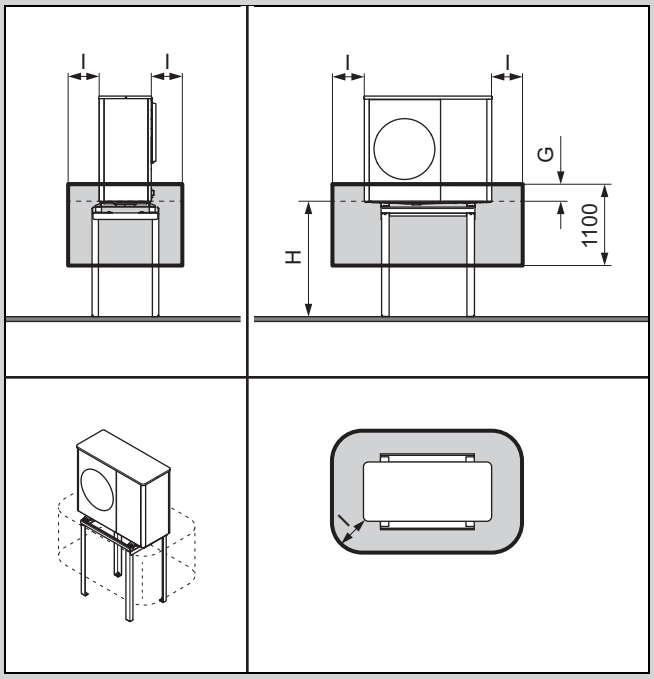

	With or without base cover
G	100 mm
H	> 1000 mm
I	500 mm

4.2.2 Installation in front of a building wall

Validity: Installation height < 400 mm

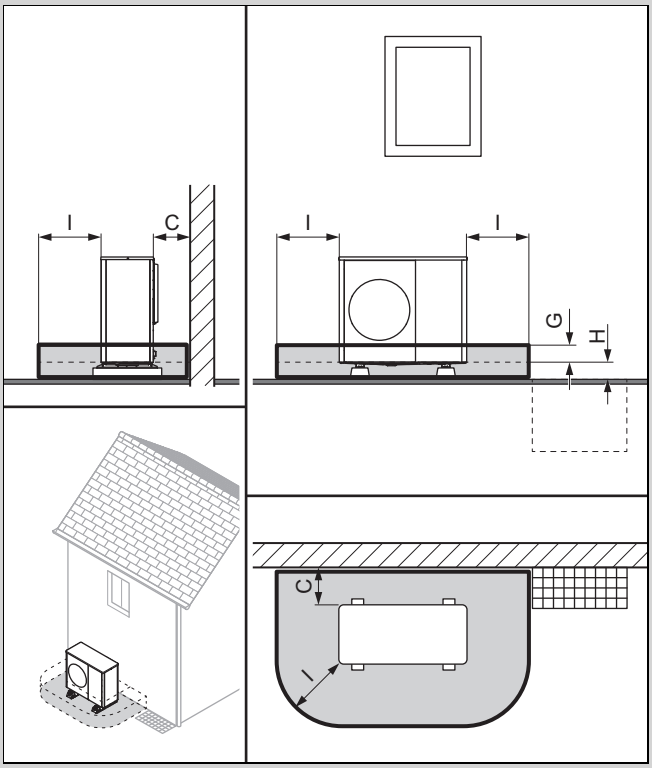

	With or without base cover
C	Minimum clearance (→ Section 5.4)
G	100 mm
H	< 400 mm
I	1000 mm

Validity: Installation height from 400 to 1000 mm

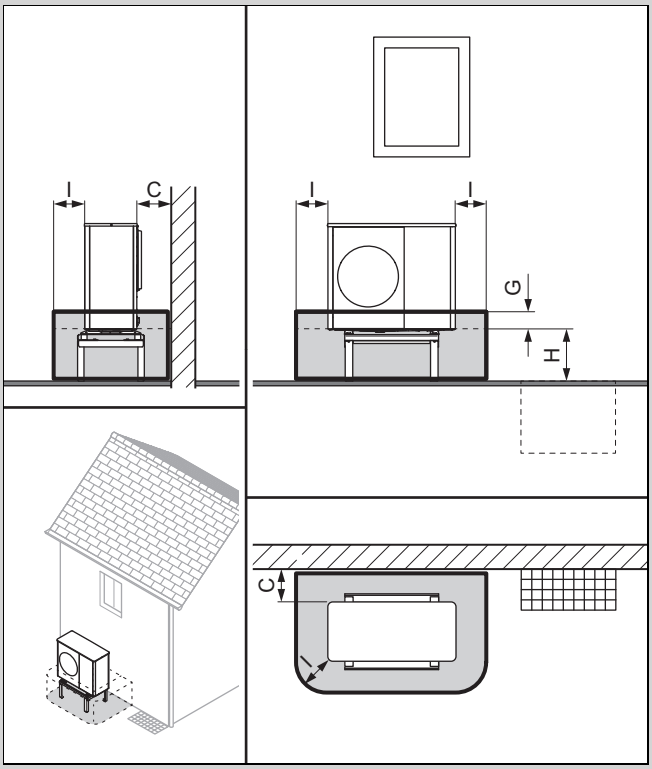

	With or without base cover
C	Minimum clearance (→ Section 5.4)
G	100 mm
H	400 to 1000 mm
I	500 mm

Suitable for installation with a raised base.

Validity: Installation height > 1000 mm

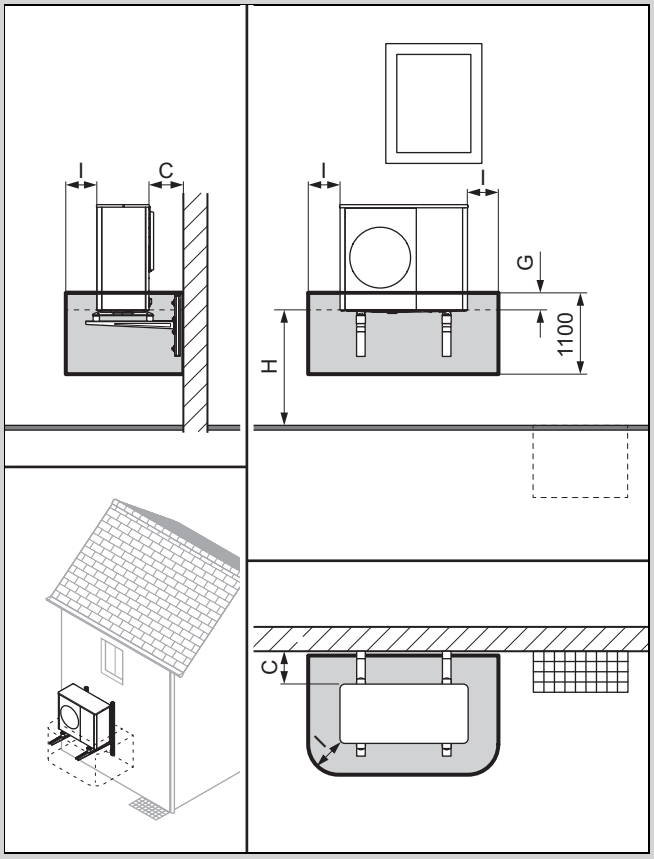

	With or without base cover
C	Minimum clearance (→ Section 5.4)
G	100 mm
H	> 1000 mm
I	500 mm

4.2.3 Installation in the right-hand corner of a building

If the clearance to the rear or side panel is ≤ 1000 mm, the protective zone applies up to the side panel. Observe the minimum clearances. (→ Section 5.4)

If the clearance to the rear or side panel is > 1000 mm, the configuration as a free-standing installation must be taken into account.

Validity: Installation height < 400 mm

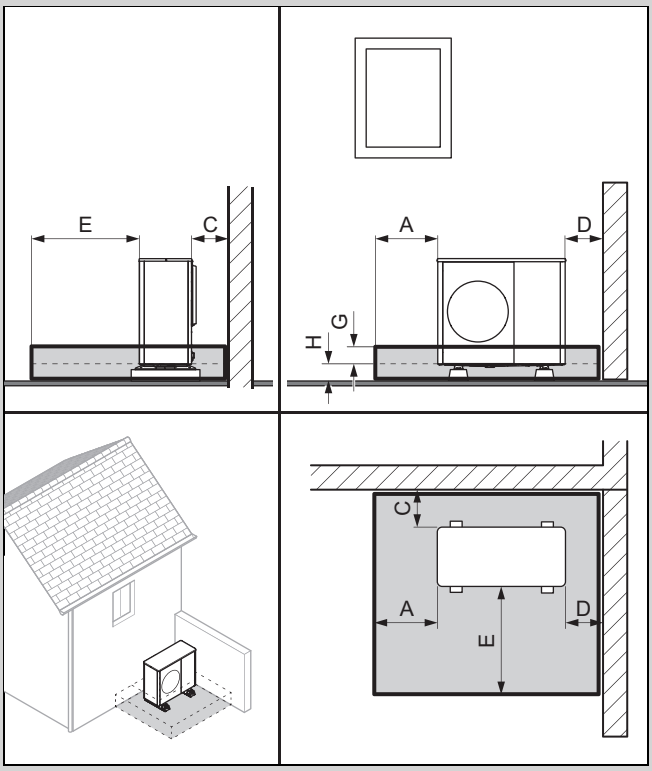

	Without base cover	With base cover
A	1000 mm	1200 mm
C	Minimum clearance (→ Section 5.4)	Minimum clearance (→ Section 5.4)
D		
E	1600 mm	1800 mm
G	100 mm	100 mm
H	< 400 mm	< 400 mm

Validity: Installation height from 400 to 1000 mm

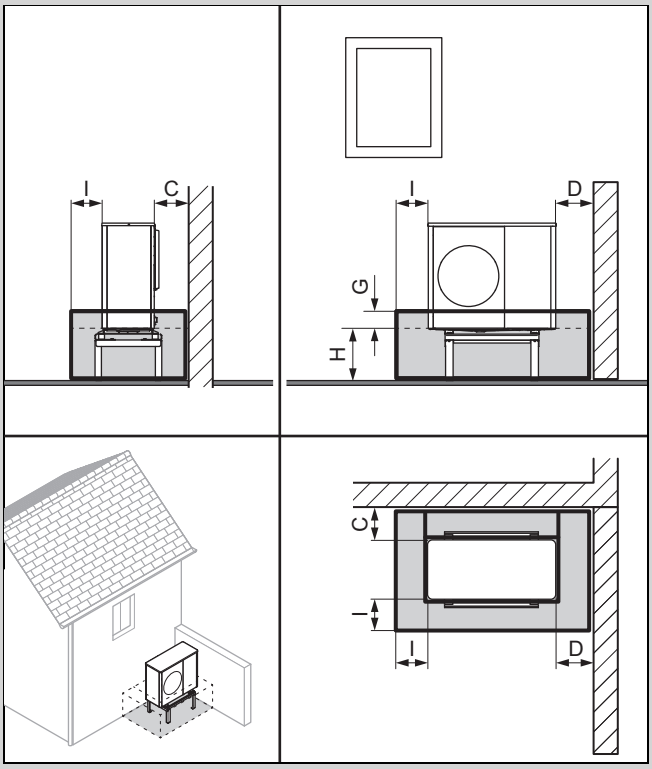

	With or without base cover
C	Minimum clearance (→ Section 5.4)
D	
I	500 mm
G	100 mm
H	400 to 1000 mm

Suitable for wall-mounting or installation with a raised base.

Validity: Installation height > 1000 mm

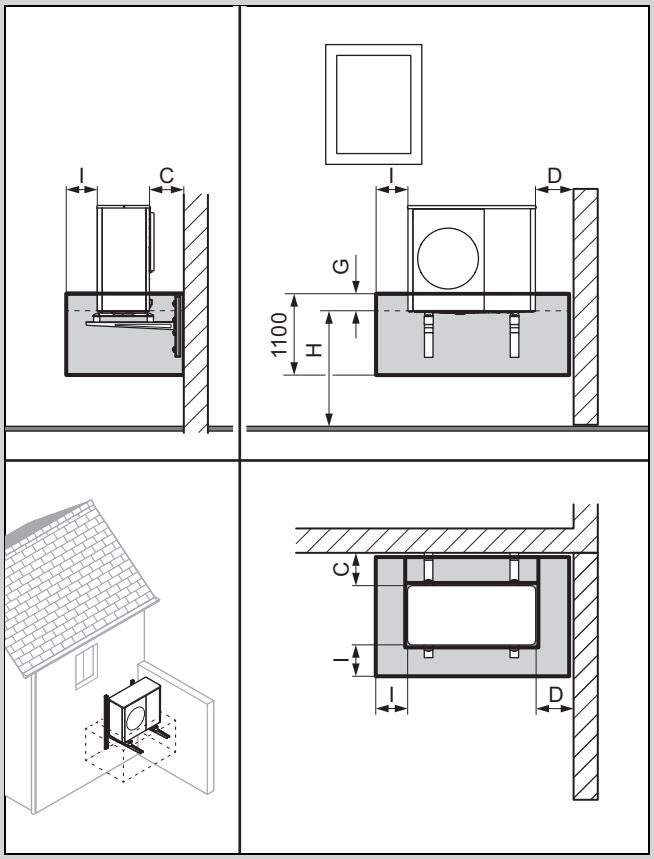

	With or without base cover
C	Minimum clearance (→ Section 5.4)
D	
I	500 mm
G	100 mm
H	> 1000 mm

4.2.4 Installation in the left-hand corner of a building

If the clearance to the rear or side panel is ≤ 1000 mm, the protective zone applies up to the side panel. Observe the minimum clearances. (→ Section 5.4)

If the clearance to the rear or side panel is > 1000 mm, the configuration as a free-standing installation must be taken into account.

Validity: Installation height < 400 mm

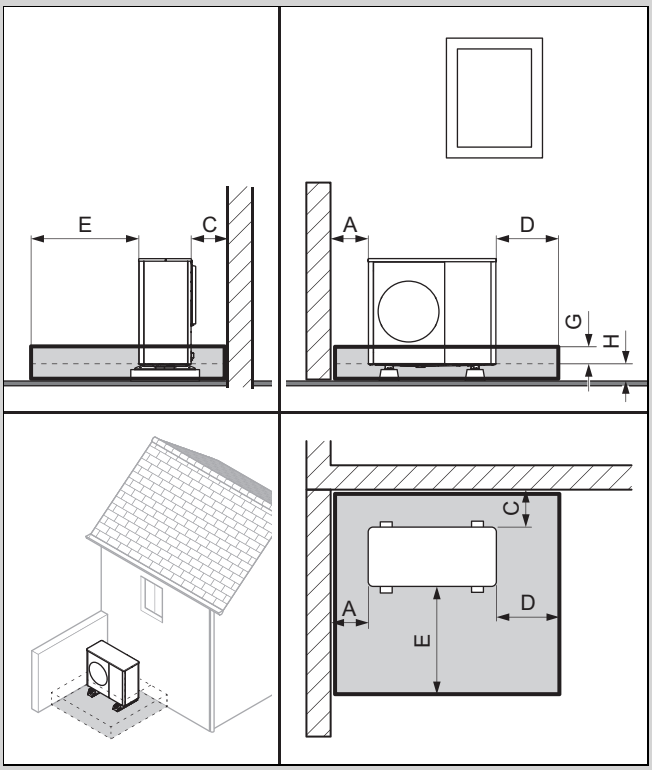

	Without base cover	With base cover
A	Minimum clearance (→ Section 5.4)	Minimum clearance (→ Section 5.4)
C		
D	1000 mm	1200 mm
E	1600 mm	1800 mm
G	100 mm	100 mm
H	< 400 mm	< 400 mm

Validity: Installation height from 400 to 1000 mm

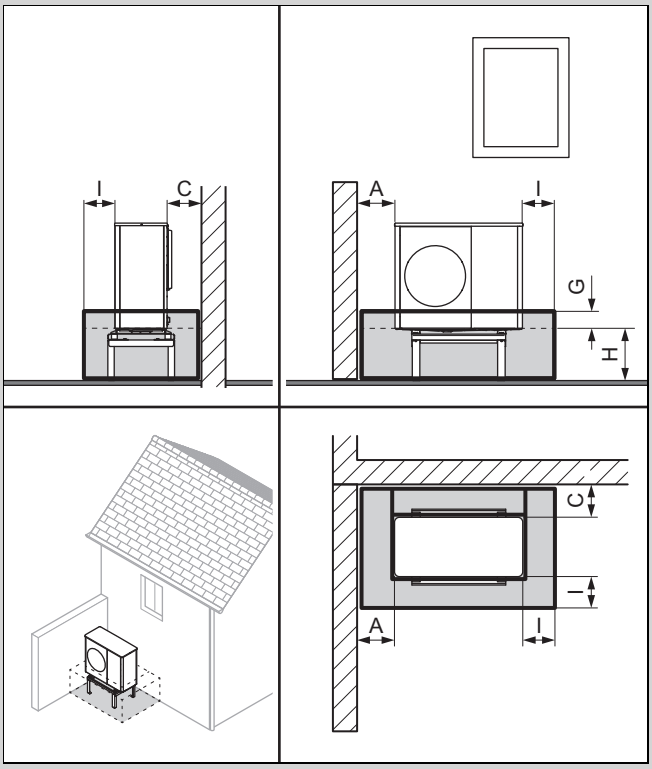

	With or without base cover
A	Minimum clearance (→ Section 5.4)
C	
G	100 mm
H	400 to 1000 mm
I	500 mm

Suitable for wall-mounting or installation with a raised base.

Validity: Installation height > 1000 mm

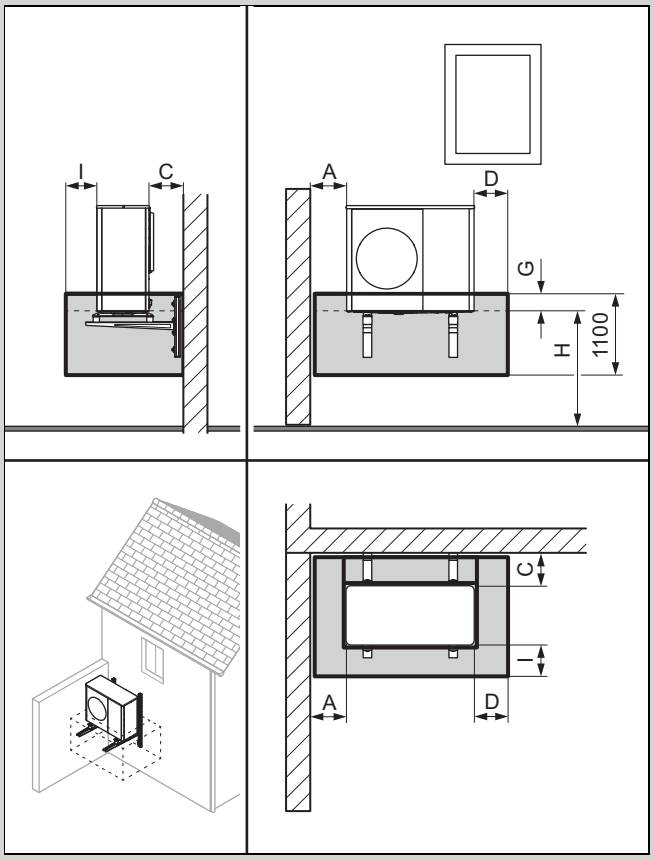

	With or without base cover
A	Minimum clearance (→ Section 5.4)
C	
D	500 mm
G	100 mm
H	> 1000 mm
I	500 mm

4.2.5 Installation with plinth wall on the right

Validity: Installation height < 400 mm

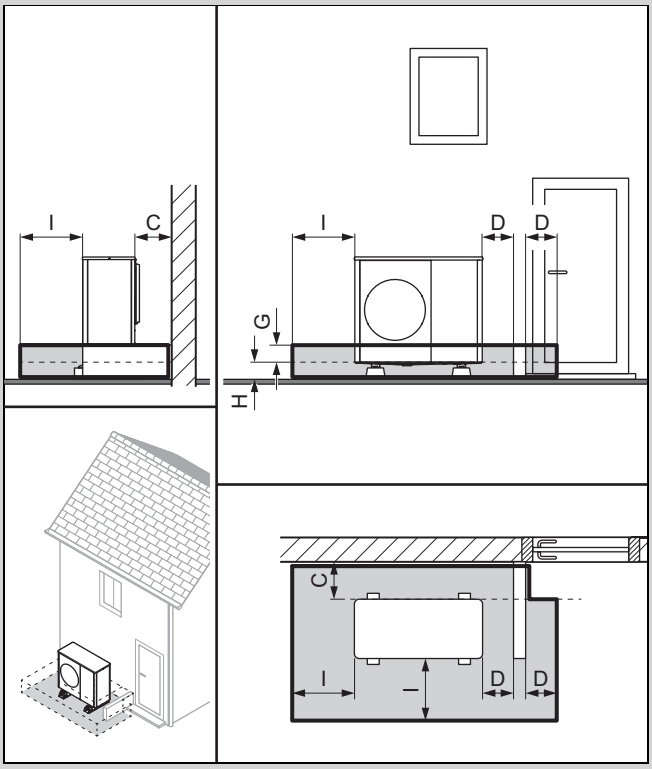

	With or without base cover
C	Minimum clearance (→ Section 5.4)
D	500 mm
G	100 mm
H	< 400 mm
I	1000 mm

The minimum height of the plinth wall must be ≥ (G + H).

4.2.6 Installation with plinth wall on the left

Validity: Installation height < 400 mm

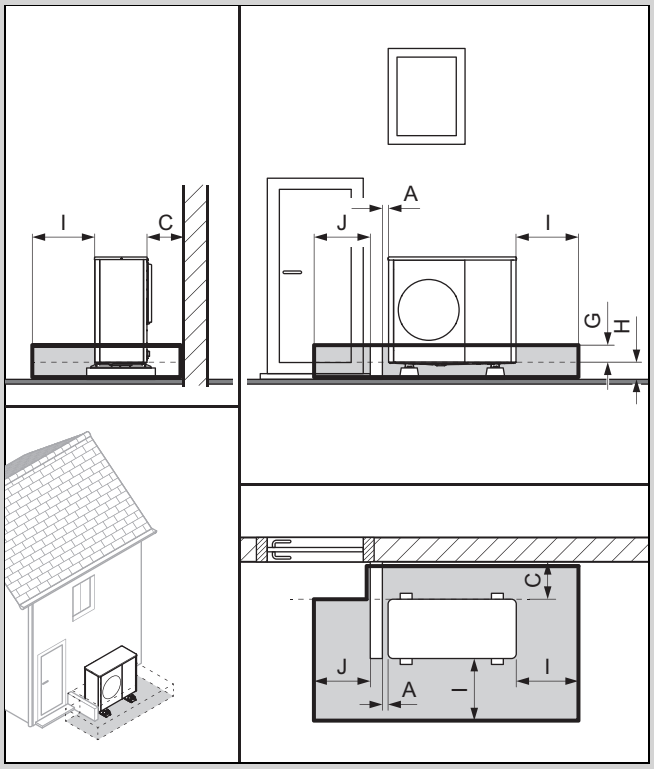

	With or without base cover
A	100 mm
C	Minimum clearance (→ Section 5.4)
G	100 mm
H	< 400 mm
I	1000 mm
J	900 mm

The minimum height of the plinth wall must be ≥ (G + H).

4.3 Protective zone with activated Flexible Space Function

The following sections describe the protective zone with the Flexible Space function activated.

Activating the Flexible Space function slightly reduces the system efficiency and slightly increases the standby energy consumption.

Inform the end user that the product must not be disconnected from the power supply when the Flexible Space Function is activated.

Installation method with activated Flexible Space function
Free-standing ground installation or flat-roof installation (→ Section 4.3.1)
Installation in front of a building wall (→ Section 4.3.2)
Installation in the right-hand corner of a building (→ Section 4.3.3)
Installation in the left-hand corner of a building (→ Section 4.3.4)

4.3.1 Free-standing ground installation or flat-roof installation

The clearance to the wall must be > 1000 mm for the unit to be considered free-standing.

Validity: Installation height < 400 mm

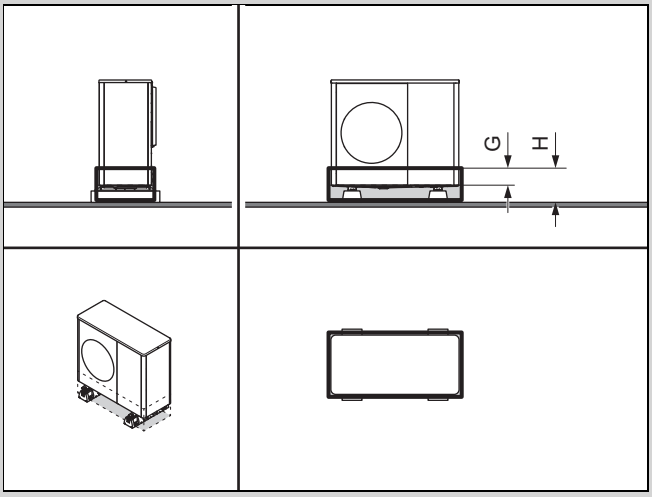

	With or without base cover
G	100 mm
H	< 400 mm

Validity: Installation height from 400 to 1000 mm

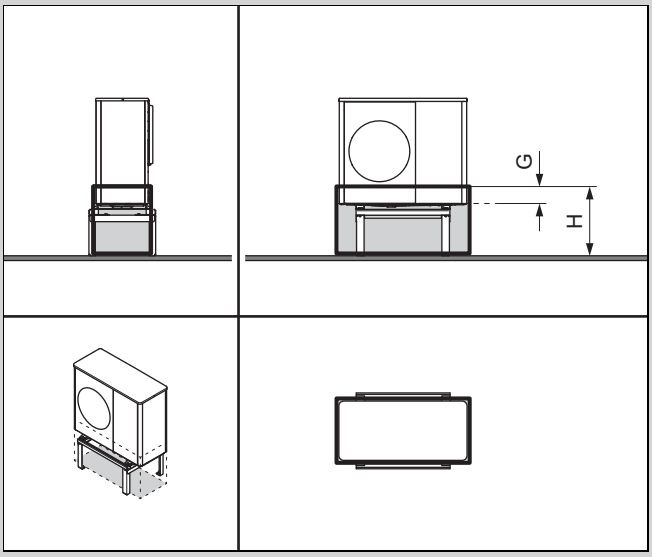

	With or without base cover
G	100 mm
H	400 to 1000 mm

Suitable for installation with a raised base.

Validity: Installation height > 1000 mm

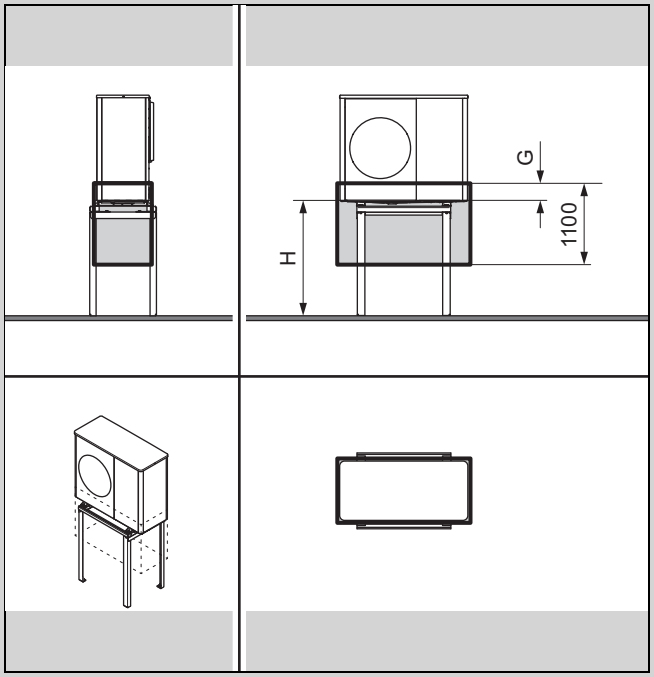

	With or without base cover
G	100 mm
H	> 1000 mm

4.3.2 Installation in front of a building wall

Validity: Installation height < 400 mm

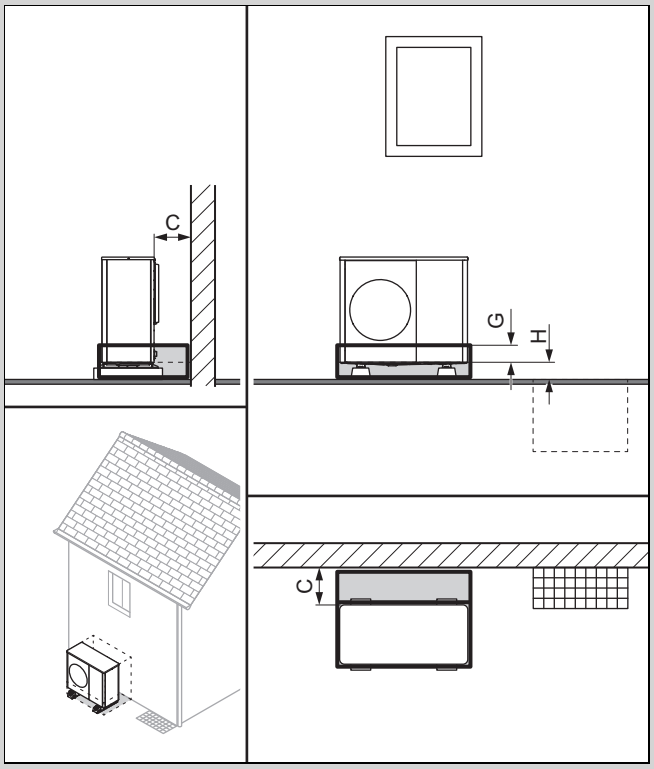

	With or without base cover
C	Minimum clearance (→ Section 5.4)
G	100 mm
H	< 400 mm

Validity: Installation height from 400 to 1000 mm

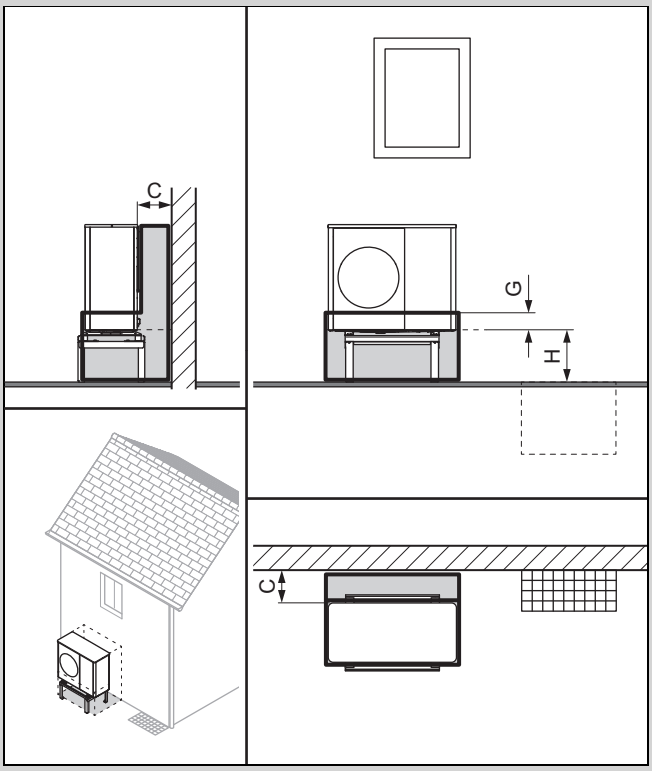

	With or without base cover
C	Minimum clearance (→ Section 5.4)
G	100 mm
H	400 to 1000 mm

Suitable for wall-mounting or installation with a raised base.

Validity: Installation height > 1000 mm

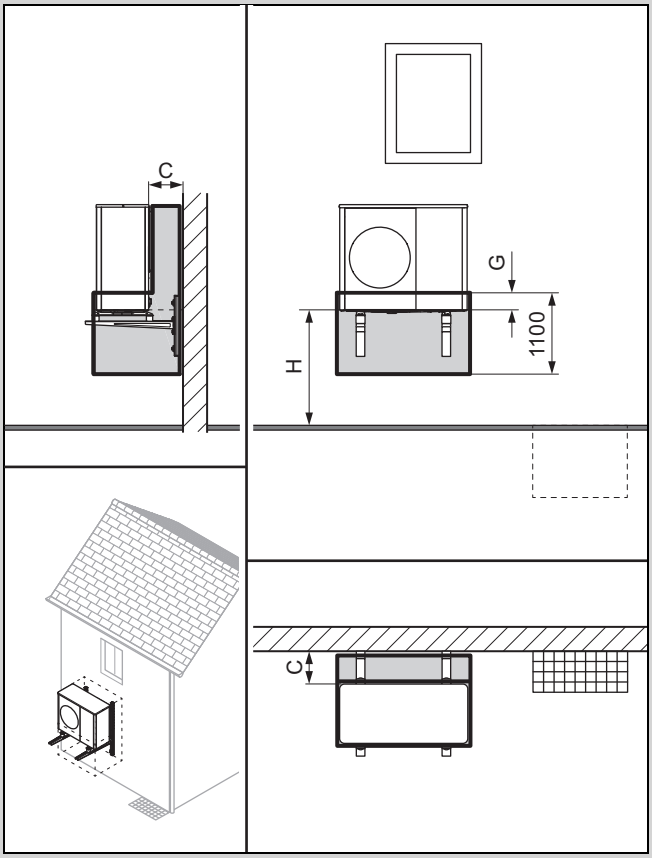

	With or without base cover
C	Minimum clearance (→ Section 5.4)
G	100 mm
H	> 1000 mm

4.3.3 Installation in the right-hand corner of a building

If the clearance to the rear or side panel is ≤ 1000 mm, the protective zone applies up to the side panel. Observe the minimum clearances. (→ Section 5.4)

If the clearance to the rear or side panel is > 1000 mm, the configuration as a free-standing installation must be taken into account.

Validity: Installation height < 400 mm

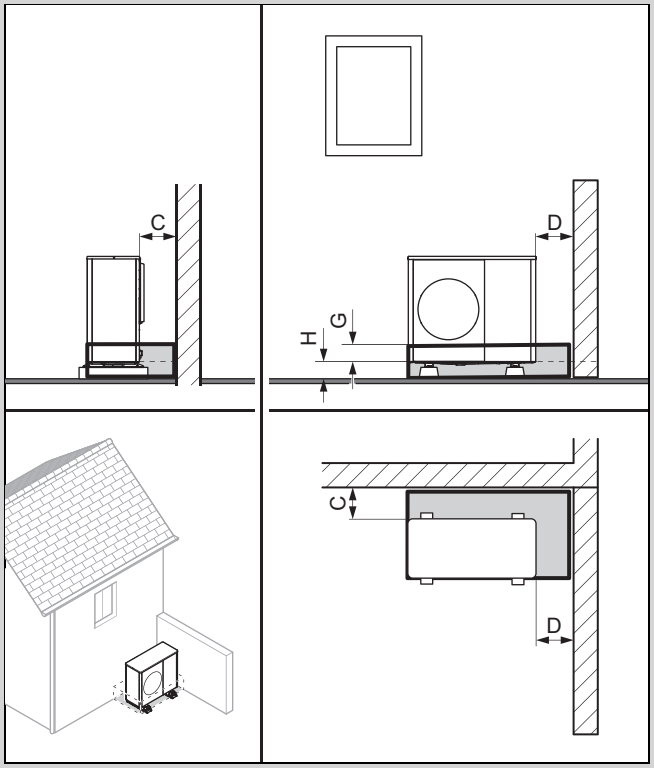

	With or without base cover
C	Minimum clearance (→ Section 5.4)
D	
G	100 mm
H	< 400 mm

Validity: Installation height from 400 to 1000 mm

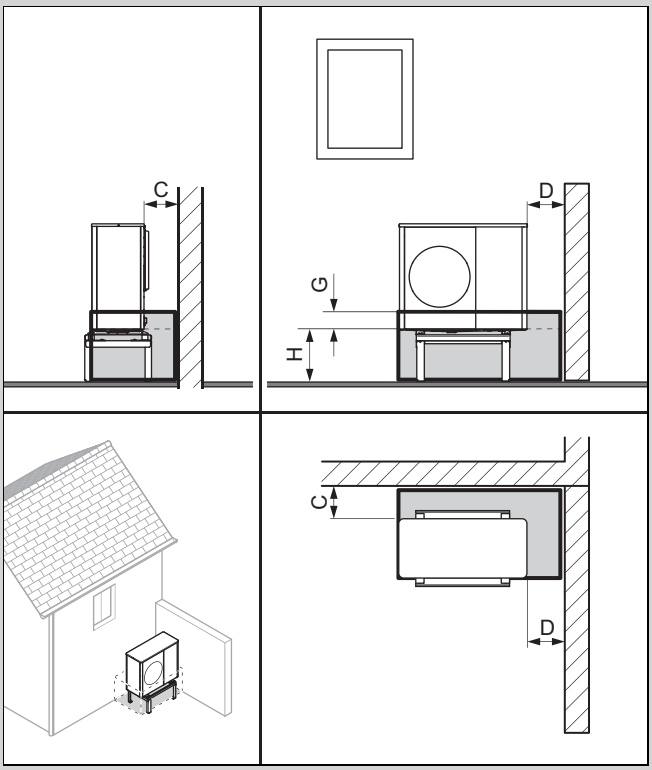

	With or without base cover
C	Minimum clearance (→ Section 5.4)
D	
G	100 mm
H	400 to 1000 mm

Suitable for wall-mounting or installation with a raised base.

Validity: Installation height > 1000 mm

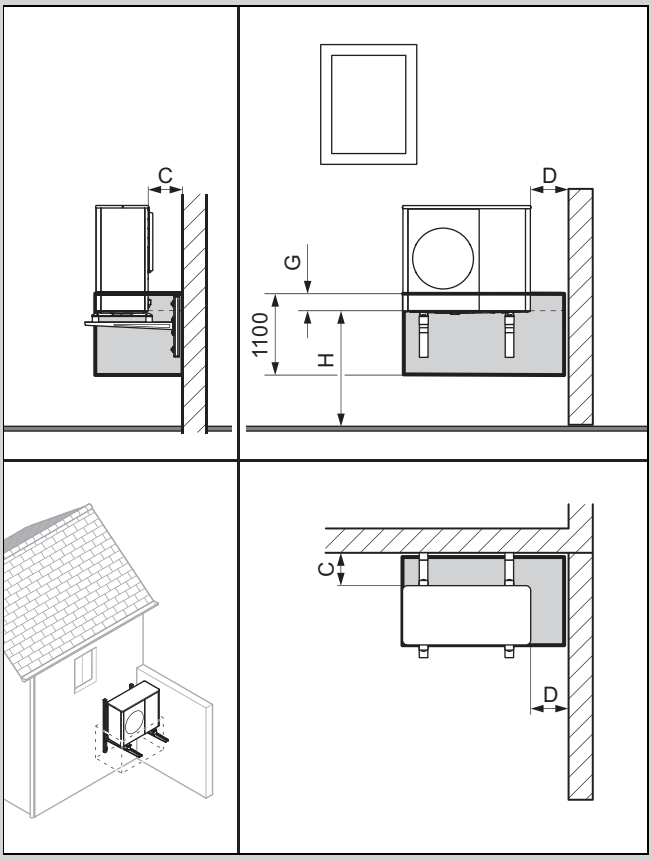

	With or without base cover
C	Minimum clearance (→ Section 5.4)
D	
G	100 mm
H	> 1000 mm

4.3.4 Installation in the left-hand corner of a building

If the clearance to the rear or side panel is ≤ 1000 mm, the protective zone applies up to the side panel. Observe the minimum clearances. (→ Section 5.4)

If the clearance to the rear or side panel is > 1000 mm, the configuration as a free-standing installation must be taken into account.

Validity: Installation height < 400 mm

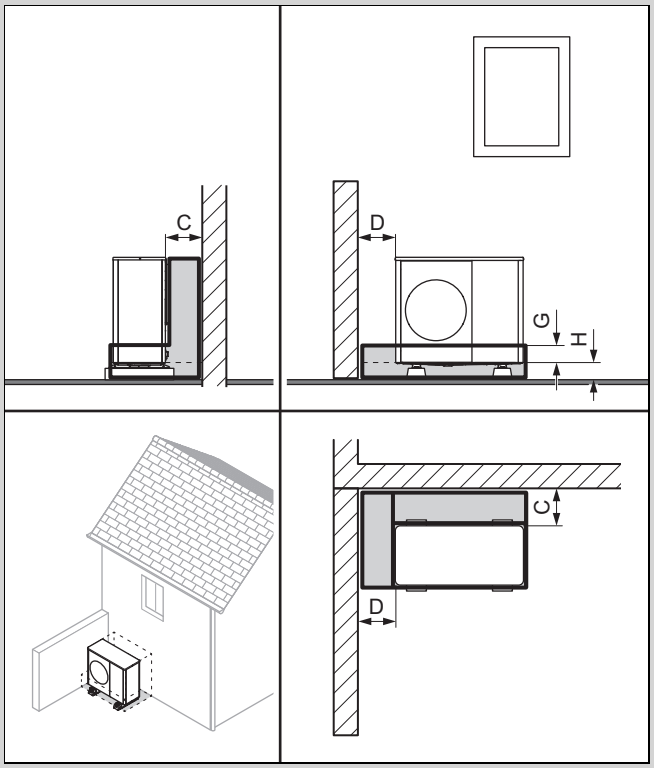

	With or without base cover
C	Minimum clearance (→ Section 5.4)
D	
G	100 mm
H	< 400 mm

Validity: Installation height from 400 to 1000 mm

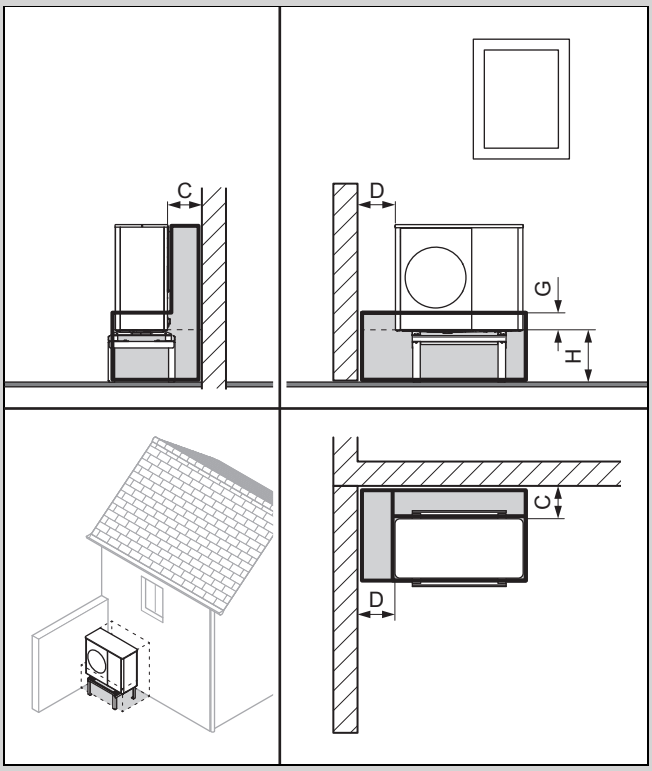

	With or without base cover
C	Minimum clearance (→ Section 5.4)
D	
G	100 mm
H	400 to 1000 mm

Suitable for wall-mounting or installation with a raised base.

Validity: Installation height > 1000 mm

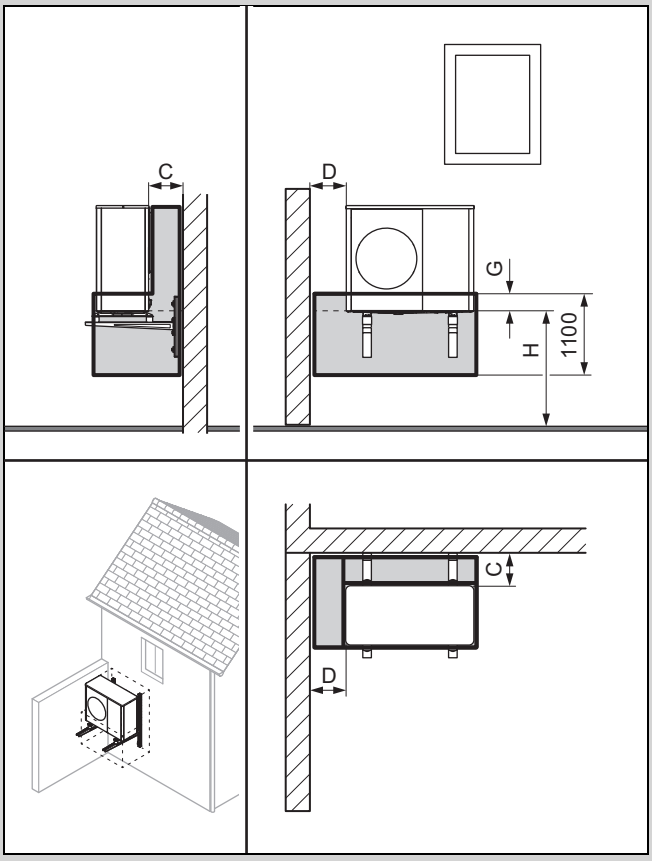

	With or without base cover
C	Minimum clearance (→ Section 5.4)
D	
G	100 mm
H	> 1000 mm

5 Set-up

5.1 Checking the scope of delivery

► Check the contents of the packaging units.

Quant-ity	Designation
1	Product
1	Enclosed documentation

5.2 Transporting the product

Warning.
Risk of injury from lifting a heavy weight.

Lifting weights that are too heavy may cause serious injury to the spine, for example.

► Note the weight of the product.
► Lift the product with a sufficient number of persons according to the product weight.

1. Take into consideration the weight distribution during transport. The product is significantly heavier on the right-hand side than on the left-hand side.
2. During transport, do not tilt the product by any more than the maximum angle of 45°.
3. Undo the screwed connection between the product and the pallet.
4. Use the transport straps or a suitable hand truck.
5. Protect the casing sections against damage.
6. After transport, remove the transport straps.

5.3 Views and dimensions

5.3.1 Front view

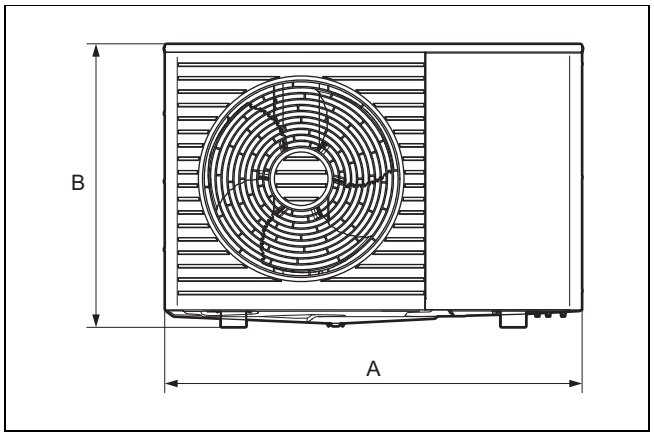

Validity: VWL 55 OR VWL 75			
A	1104 mm	B	750 mm

Validity: VWL 115			
A	1169 mm	B	1103 mm

5.3.2 Side view, right

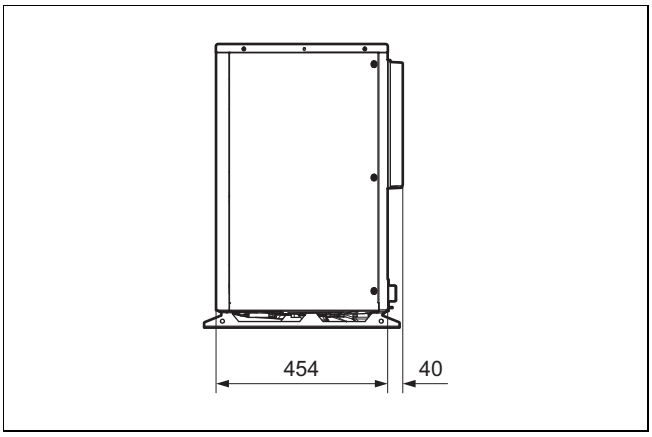

5.3.3 Bottom view

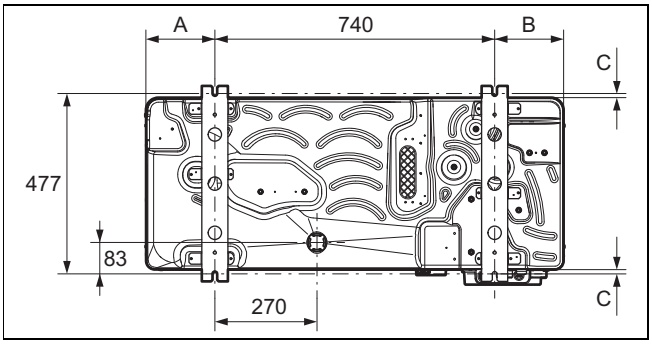

Validity: VWL 55 OR VWL 75			
A	183 mm	B	180 mm
C	11 mm		

Validity: VWL 115			
A	212.6 mm	B	212.6 mm
C	13.4 mm		

5.3.4 Rear view

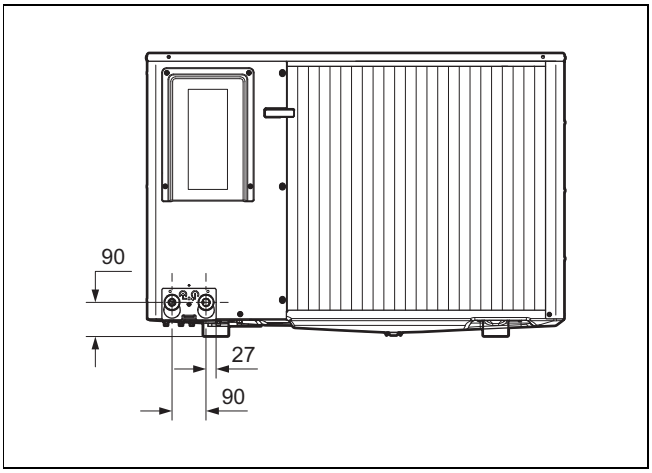

5.4 Complying with minimum clearances

- ► To guarantee sufficient air flow and to facilitate maintenance work, observe the minimum clearances that are specified.
- ► Ensure that there is sufficient room to install the hydraulic pipelines.

Validity: Floor installation OR Flat roof installation

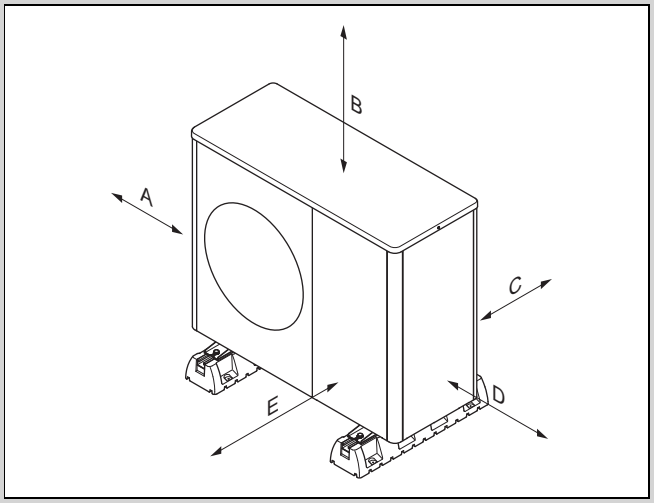

Minimum clearance	Heating and cooling mode
A	250 mm
B	300 mm
C	250 mm
D	450 mm
E	600 mm

Validity: Ground installation, more than one product

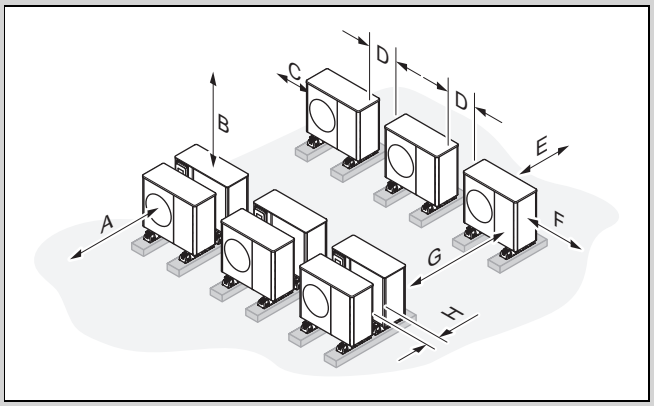

Minimum clearance	Heating and cooling mode
A	600 mm
B	300 mm
C	250 mm
D	450 mm
E	250 mm
F	450 mm
G	1500 mm
H	400 mm

Validity: Wall-mounting

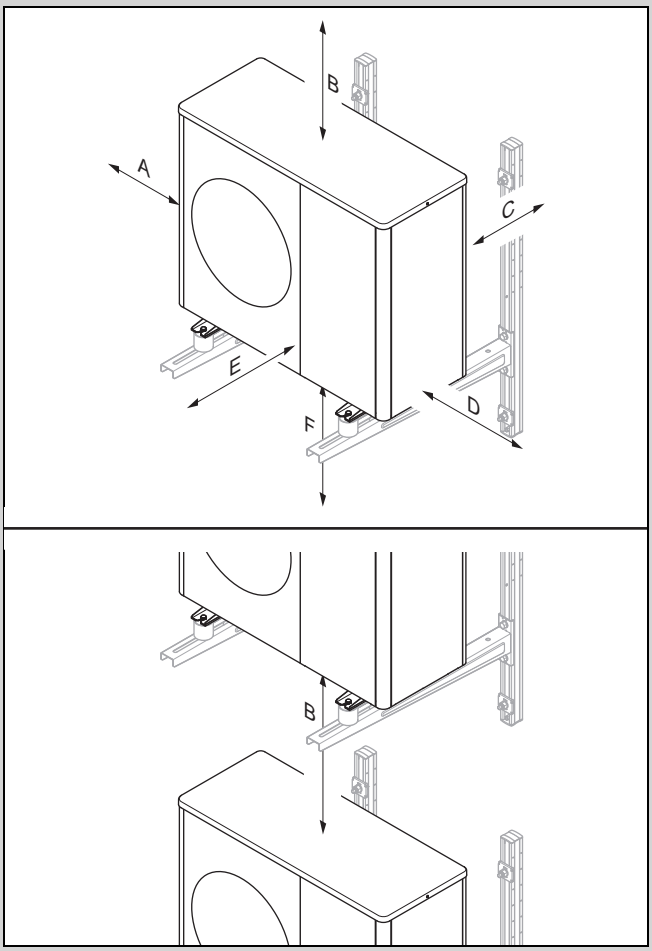

Minimum clearance	Heating and cooling mode
A	250 mm
B	300 mm
C	250 mm
D	450 mm
E	600 mm
F	300 mm

5.5 Conditions for the installation type

The product is suitable for the following installation types: Ground installation, wall installation and flat-roof installation.

The pitched-roof installation is not permitted.

5.6 Selecting the installation site

- Note that installation in sinks or areas that do not allow free outflow of air is not permitted.
- Note that the cold air emitted by the outdoor unit may significantly cool the ground in front of the outlet opening up to a distance of approx. 3 m. On damp surfaces and at temperatures around freezing point, this may accelerate the formation of black ice and lead to an increased risk of slipping and falling.
- If the installation site is in the immediate vicinity of the coastline, ensure that the product is protected against spraying water by an additional protection device.
- Keep away from flammable substances or flammable gases.
- Keep away from heat sources.
- Note that the surface texture of the outdoor unit makes it highly susceptible to damage (e.g. scratches) due to impact from branches or stones.
- Do not expose the outdoor unit to dirty, dusty or corrosive air.
- Keep away from ventilation openings or ventilation ducts.
- Keep away from deciduous trees and shrubs.
- Please note that the installation site must be below 2000 m above sea level.
- Select an installation site that is as far away from rooms that you use yourself, e.g. bedrooms.
- Please note the sound emissions. Select an installation site that is as far away from the windows of adjacent building as possible.
- Select an installation site that is easily accessible so that maintenance and service work can be carried out.
- If the installation site is adjacent to a vehicle shunting area, protect the product using ram protection.

Validity: Ground installation

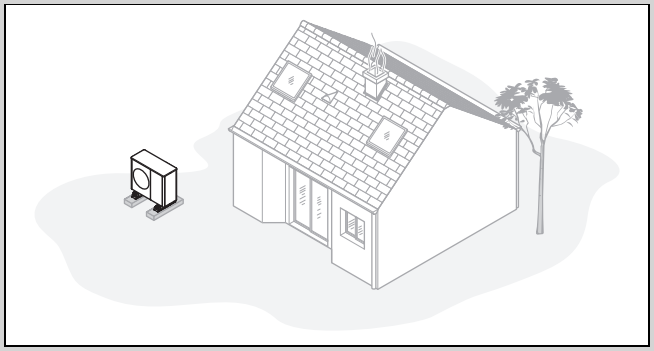

- Avoid choosing an installation site that is in the corner of a room, between walls or between fences.
- Prevent the return intake of air from the air outlet.
- Ensure that water cannot collect on the subsoil.
- Ensure that the subsoil can absorb water well.
- Plan a bed of gravel and rubble for the condensate discharge.
- Select an installation site which is free from significant accumulations of snow in winter.
- Select an installation site at which the air inlet is not affected by strong winds. Position the unit as crosswise to the main direction of wind as possible.
- If the installation site is not protected against the wind, you should plan to set up a protective wall.
- Please note the sound emissions. Avoid corners of rooms, recesses or sites between walls.
- Select an installation site with excellent sound absorption thanks to grass, hedges or fencing.
- Route the hydraulic pipelines and electrical wires underground.
- Plan for a wall duct that leads from the outdoor unit through the building wall.

Validity: Wall installation

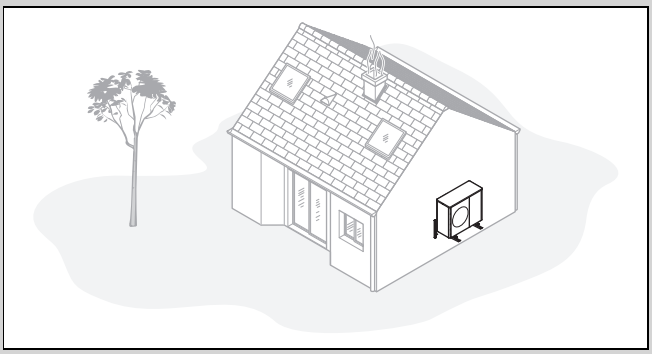

- Ensure that the structural design and load-bearing capacity of the wall complies with the requirements. Note the weight of the unit mounting bracket and the product.
- Avoid choosing an installation position which is near to a window.
- Please note the sound emissions. Maintain sufficient clearance from reflective building walls.
- Route the hydraulic pipelines and electrical wires.
- Provide a wall duct.

Validity: Flat-roof installation

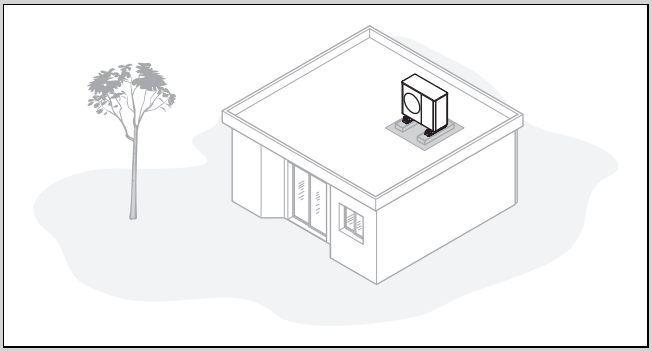

- Only install the product in buildings with a solid construction and that have cast concrete ceilings throughout.

Note
Other flat-roof constructions must undergo static analysis to determine structural stability and be checked for possible sound transmission.

- Do not install the product in buildings with a wooden structure or with a lightweight roof.
- Select an installation site that is easily accessible so that foliage or snow can be regularly removed from the product.
- Select an installation site at which the air inlet is not affected by strong winds. Position the unit as crosswise to the main direction of wind as possible.
- If the installation site is not protected against the wind, you should plan to set up a protective wall.
- Please note the sound emissions. Maintain sufficient clearance from adjacent buildings.
- Route the hydraulic pipelines and electrical wires.
- Provide a wall duct.

5.7 Permissible height difference between the outdoor unit and the expansion relief valve in the heating circuit

With regard to the outdoor unit's installation site, the position of the expansion relief valve may be higher or lower in the heating circuit. The expansion relief valve in the heating circuit may already be present in the indoor unit.

Installation case 1: Expansion relief valve in the heating circuit at the same height level as the outdoor unit

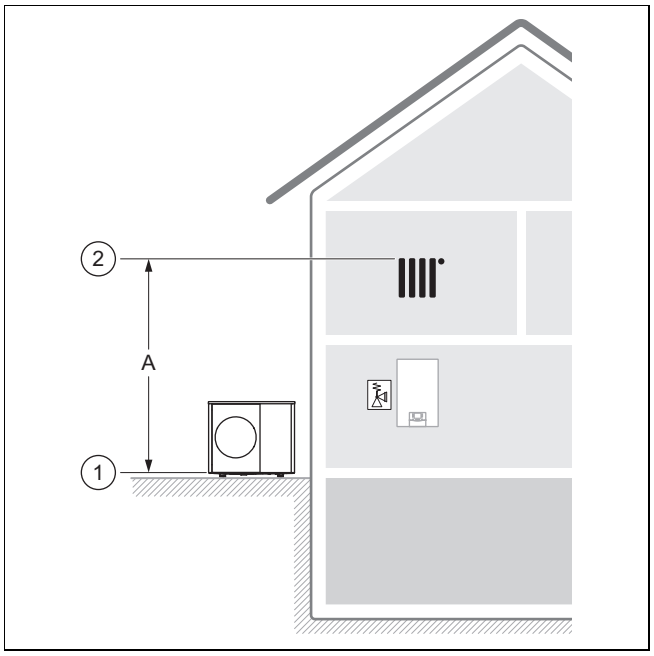

The position **(1)** of the lower edge of the outdoor unit and the position **(2)** of the highest point in the heating circuit are relevant here.

The permissible height difference **(A)** is limited to 14 m.

Installation case 2: Expansion relief valve in the heating circuit below the outdoor unit

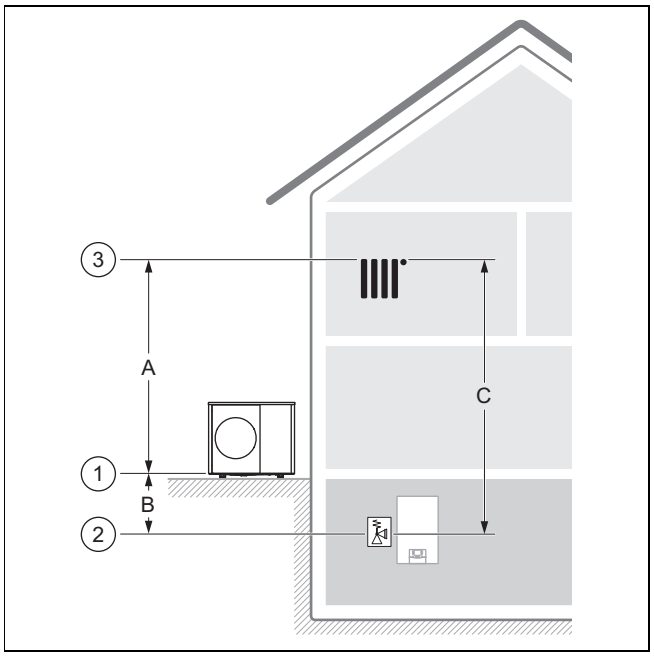

The position **(1)** of the lower edge of the outdoor unit, the position **(2)** of the expansion relief valve in the heating circuit, and the position **(3)** of the highest point in the heating circuit are relevant here.

The permissible height difference **(C)** is limited to 18 m.

The permissible height difference **(A)** is limited to 14 m.

The permissible height difference **(B)** is limited to 9 m. Up to 15 m is possible if, when designing the heating installation, the operating pressure, the expansion vessel (volume and pre-charge pressure) and the water expansion are taken into consideration.

Installation case 3: Expansion relief valve in the heating circuit above the outdoor unit

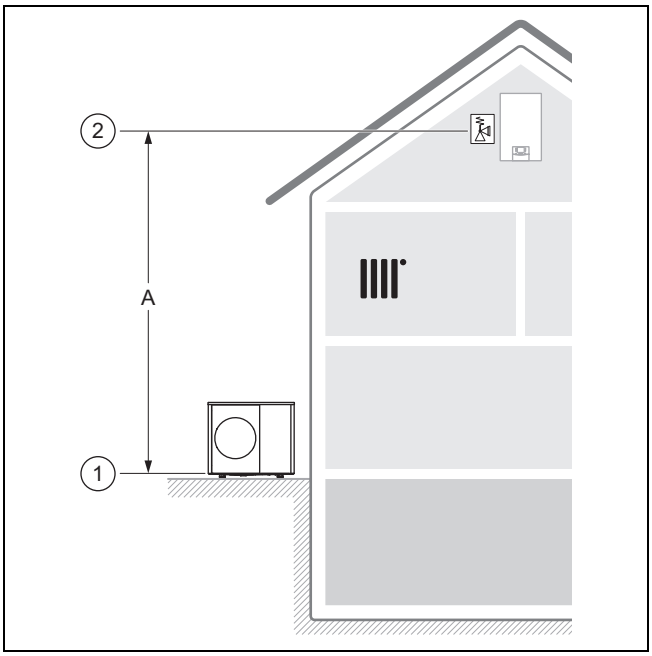

The position **(1)** of the lower edge of the outdoor unit and the position **(2)** of the highest point in the heating circuit are relevant here.

The permissible height difference **(A)** is limited to 14 m. If other heating pumps without hydraulic isolation are present in the heating installation, the height difference should be reduced in order to prevent cavitation.

5.8 Preparing for set-up and installation

Danger!

Risk of death caused by fire or explosion if there is a leak in the refrigerant circuit!

The product contains the combustible refrigerant R290. In the event of a leak, escaping refrigerant may mix with air to form a flammable atmosphere. There is a risk of fire and explosion.

- ► Ensure that there are no ignition sources, such as plug sockets, light switches, lamps, electrical switches or other permanent ignitions sources, in the protective zone.

- ► Observe the basic safety regulations before starting work.
- ► Note that the surface texture of the outdoor unit makes it highly susceptible to damage, particularly scratches. Use clean gloves when transporting the outdoor unit and leave the outdoor unit in its packaging for as long as possible to avoid unnecessary damage.

5.9 Planning the condensate discharge

The condensate that accumulates can be guided into a sewer, pump sump or soakaway via a downpipe, gully, balcony run-off or roof run-off. Open gullies or downpipes within the protective zone do not pose any safety risk.

For all installation types, you must ensure that any condensate that accumulates is discharged frost-free.

Validity: Ground installation

For the ground installation, the condensate must be discharged via a downpipe into a gravel bed which is located in the frost-free area.

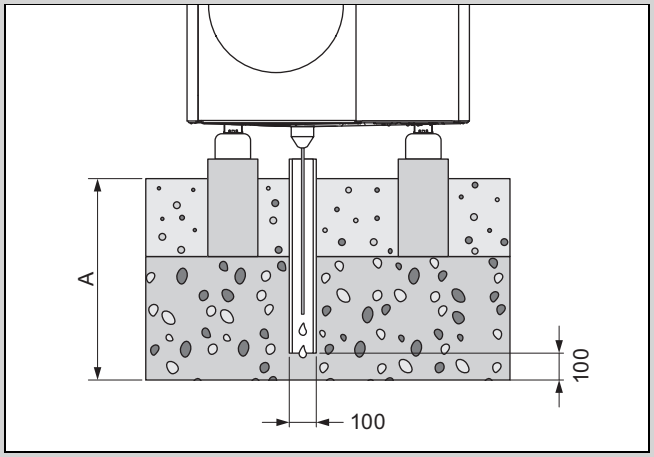

For a region with ground frost, dimension A is ≥ 1000 mm and, for a region without ground frost, it is ≥ 600 mm.

The downpipe must flow into a sufficiently large gravel bed so that the condensate can trickle away freely.

To prevent the condensate from freezing, the heating wire must be threaded into the downpipe via the condensate discharge tundish.

Validity: Wall installation

For wall installation, the condensate can be discharged into a gravel bed that is located below the product.

Alternatively, the condensate can be discharged by connecting the condensate discharge pipe to a downpipe. In this case, depending on the local conditions, you must use an electrical pipe trace heater (optional accessory) in order to keep the condensate discharge pipe frost-free.

Validity: Flat-roof installation

For flat-roof installation, the condensate can be discharged by connecting a condensate discharge pipe to a downpipe or a roof run-off. In this case, depending on the local conditions, you must use an electrical pipe trace heater (optional accessory) in order to keep the condensate discharge pipe frost-free.

5.10 Planning the foundation

Validity: Ground installation

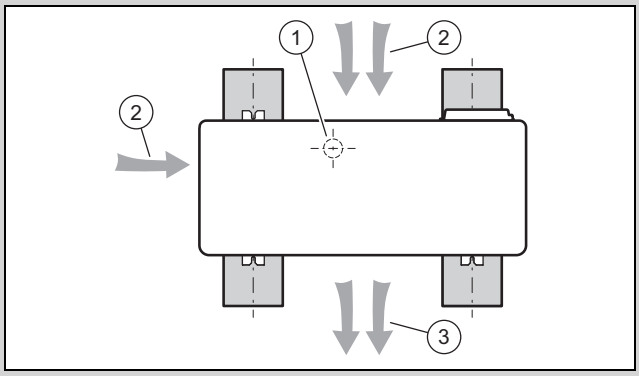

- Note the subsequent position and orientation of the product on the strip foundations, as shown in the image.
- Ensure that the position **(1)** of the condensate discharge is not in the centre between the strip foundations.
- Ensure that the air inlet **(2)** is on the side as well as the rear and the air outlet **(3)** is on the front of the product.

5.11 Creating a foundation

Validity: Ground installation

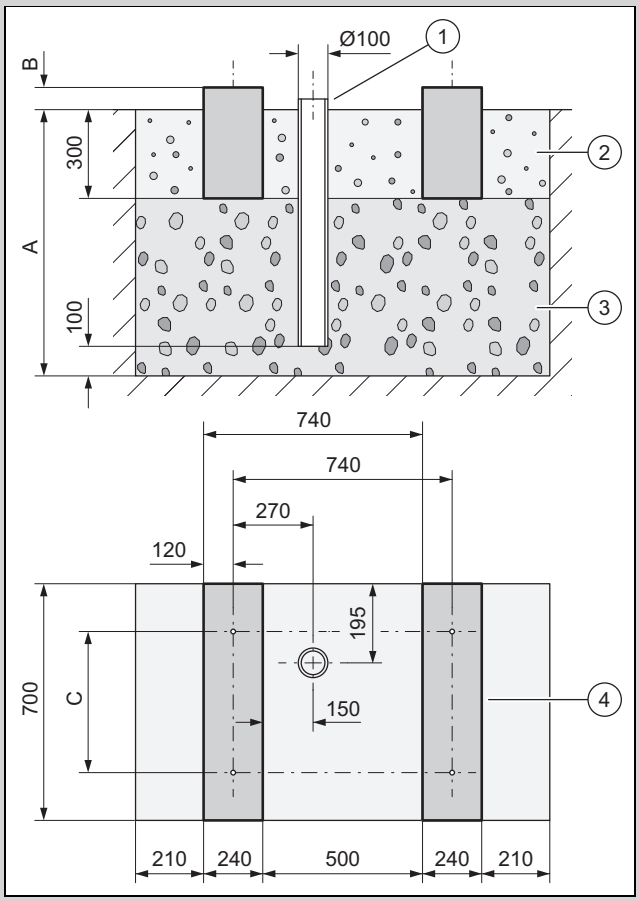

- Dig a hole in the ground. The recommended dimensions can be found in the figure.
- Apply an initial 100 mm layer of water-permeable coarse rubble **(3)**.
- Insert a downpipe **(1)** to divert the condensate.
- Apply an additional layer of water-permeable coarse rubble.
- Calculate the depth **(A)** in accordance with local conditions.
  - Region with ground frost: Minimum depth: 1000 mm
  - Region without ground frost: Minimum depth: 600 mm
- Calculate the height **(B)** in accordance with local conditions.
- Create two concrete strip foundations **(4)**. The recommended dimensions can be found in the figure.
- Observe the clearances for the drill holes **(C)** for the anti-vibration feet.
  - Installation with small anti-vibration feet: 480 mm
  - Installation with large anti-vibration feet (40 cm): 344 mm
  - Installation with large anti-vibration feet (60 cm): 450 mm
- Place a gravel bed **(2)** between and beside the strip foundations.

5.12 Loosening the product from the pallet

Condition: Installation with large anti-vibration feet

- Undo the four screws from the pallet.
  - ◁ The metal feet remain screwed to the product.
- Install the product. (→ Section 5.14)

Condition: Installation with small anti-vibration feet

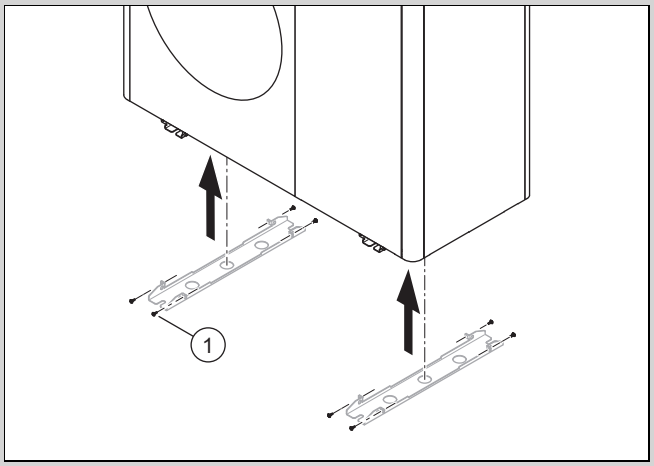

- Undo the eight screws **(1)** of the metal feet.
- Lift the product using the transport harness.
  - ◁ The metal feet remain screwed to the pallet.
- Install the product. (→ Section 5.14)

5.13 Guaranteeing occupational safety

Validity: Wall installation

- Ensure that the installation position on the wall can be safely accessed.
- If the work on the product takes place at a height above 3 m, install technical fall protection.
- Observe the local laws and regulations.

Validity: Flat-roof installation

- Ensure that the flat roof can be safely accessed.
- Maintain a safety area of 2 m to the fall edge, plus the clearance that is required for working on the product. The safety area must not be entered.

- If this is not possible, then install technical fall protection at the fall edge, for example reliable railings. Alternatively, set up technical safety catch equipment.
- Maintain sufficient clearance to any roof escape hatches and flat-roof windows. When carrying out the work, use suitable protective equipment to prevent you from stepping on or falling through any escape hatches and flat-roof windows.

5.14 Installing the product

Validity: Floor installation

- Use the appropriate products from the accessories, depending on the required installation type.
  - Small anti-vibration feet
  - Large anti-vibration feet
  - Raised base and small anti-vibration feet
- Ensure that the large anti-vibration feet are screwed to the installation surface/raised base.
- Align the product horizontally.
  - Maximum permissible deviation: 1°
- Screw the product to the anti-vibration feet.

Validity: Wall-mounting

- Check the design and load-bearing capacity of the wall. Note the weight of the product.
- Use the unit mounting bracket that is suitable for wall-mounting from the accessories.
- Use the small anti-vibration feet.
- Ensure that the small anti-vibration feet are screwed to the unit mounting bracket.
- Align the product horizontally.
  - Maximum permissible deviation: 1°
- Screw the product to the anti-vibration feet.

Validity: Flat roof installation

- Note the weight of the product.
- Use a sufficient amount of concrete bases and an anti-slip protective mat.
- Screw the anti-vibration feet to the concrete base and use appropriate wall plugs.
- Align the product horizontally.
  - Maximum permissible deviation: 1°
- Screw the product to the anti-vibration feet.

5.15 Ensuring condensate discharge

Danger!
Risk of injury due to frozen condensate.

Frozen condensate on paths may cause falls.

- Ensure that condensate does not discharge onto paths and that ice cannot build up there.

1. For all installation types, ensure that any condensate that accumulates is discharged frost-free.

Validity: Ground installation

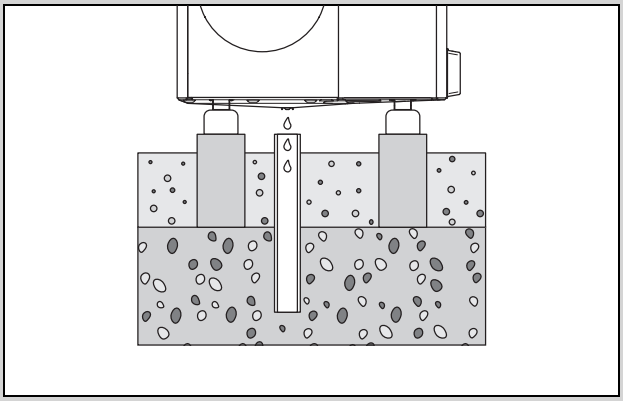

- Ensure that the condensate discharge opening is positioned in the centre above the downpipe in the gravel bed.
- If, alternatively, the condensate must be discharged via drain pipework, then use a suitable product from the accessories.

Validity: Wall installation

- Use the gravel bed below the product to drain away the condensate.
- If, alternatively, the condensate must be discharged via drain pipework, then use a suitable product from the accessories.

Validity: Flat-roof installation

- Use the flat roof to drain away the condensate.
- If, alternatively, the condensate must be discharged via drain pipework, then use a suitable product from the accessories.

5.16 Setting up a protective wall

Validity: Ground installation OR Flat-roof installation

- If the installation site is not protected against the wind, set up a protective wall against the wall.
- Comply with the minimum clearances. (→ Section 5.4)

5.17 Removing/installing the casing sections

The following work must only be carried out when required or during maintenance work or repair work.

The following tool is required for this:

– Screwdriver for T20 tapping screw

Note that the surface texture of the outdoor unit makes it highly susceptible to damage, particularly scratches.

Observe the following when removing or installing casing sections:

– Set down the removed casing sections in a location where they are protected from damage. If necessary, cover the casing sections to prevent damage to the surface.
– When installing the casing sections, take steps to ensure they are not damaged in the process.

5.17.1 Removing the top casing

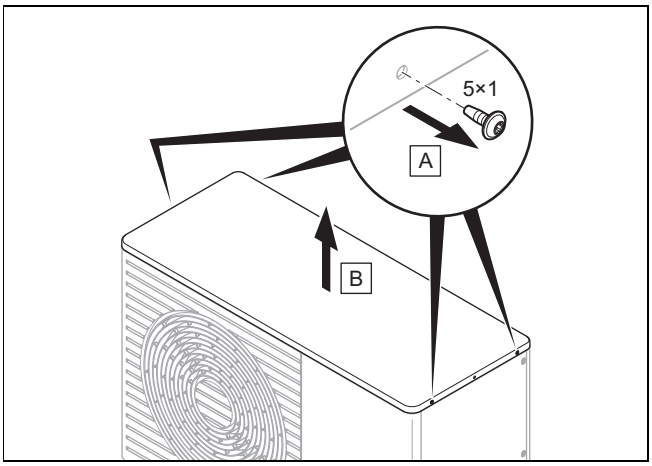

5.17.2 Removing the front casing

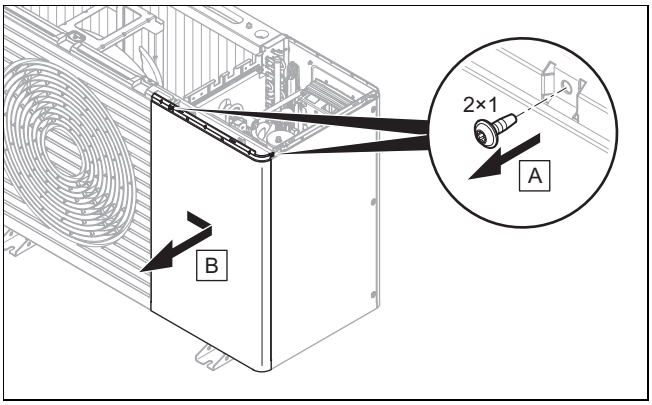

5.17.3 Removing the right-hand side casing

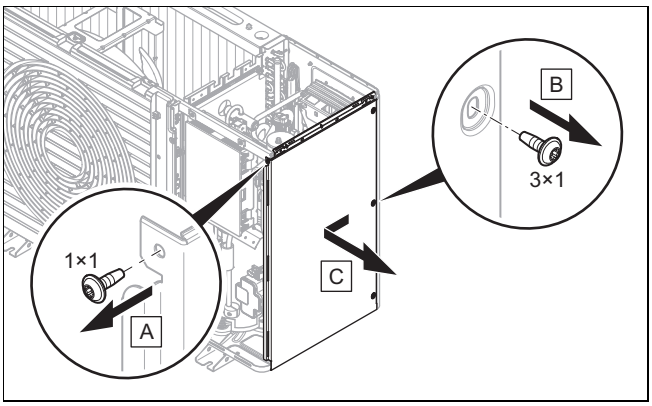

5.17.4 Removing the air outlet grille

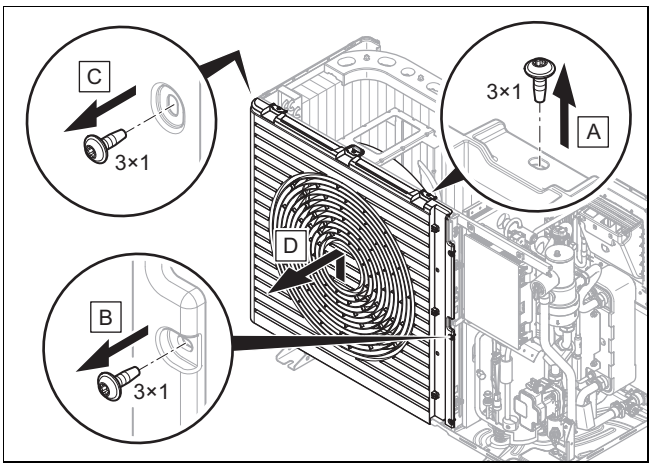

5.18 Installing the casing sections

► When installing, carry out the steps for removal in reverse. (→ Section 5.17)

6 Hydraulics installation

6.1 Installation type: Direct connection or system separation

In the case of a direct connection, the outdoor unit is hydraulically connected directly to the indoor unit and the heating installation. In this case, if there is frost, there is a risk that the outdoor unit will freeze.

In the case of a system separation, the heating circuit is separated into a primary and a secondary heating circuit. In this case, the separation is implemented using an optional intermediate heat exchanger, which is positioned in the indoor unit or in the building. If the primary heating circuit is filled with a water/frost protection mixture, the outdoor unit is protected against freezing in the case of frost or a power cut. A system separation increases the product's current consumption.

6.2 Guaranteeing the minimum circulation water volume

In heating installations that are equipped primarily with thermostatic or electrically controlled valves, a constant and sufficient flow through the heat pump must be ensured. When designing the heating installation, the minimum circulation water volume of heating water must be guaranteed.

6.3 Requirements for hydraulic components

Plastic pipes that are used for the heating circuit between the building and the product must be diffusion-tight.

Pipelines that are used for the heating circuit between the building and the product must have UV- and high-temperature-resistant thermal insulation.

6.4 Preparing the hydraulics installation

1. Flush the heating installation thoroughly before connecting the product in order to remove any possible residue from the pipelines.
2. Carry out soldering work on connectors before installing the associated pipelines on the product.
3. Install a line strainer in the pipeline for the heating return.

6.5 Routing pipelines to the product

1. Route the pipelines for the heating circuit from the building, through the wall duct and to the product.

Validity: Ground installation

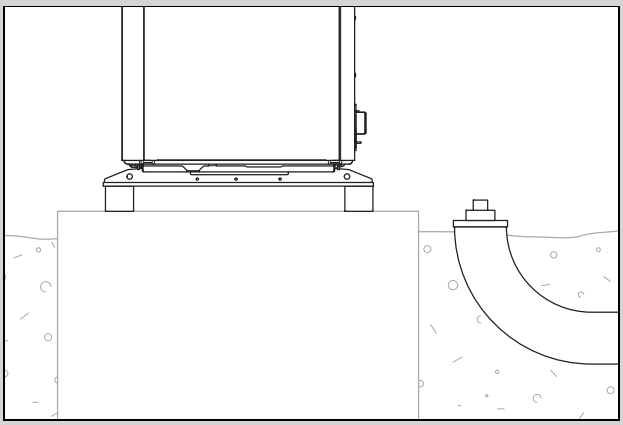

- Route the pipelines through a suitable safety pipe in the ground, as shown in the example in the figure.
- You can find the dimensions and clearances in the assembly instructions for the accessories.

Validity: Wall installation

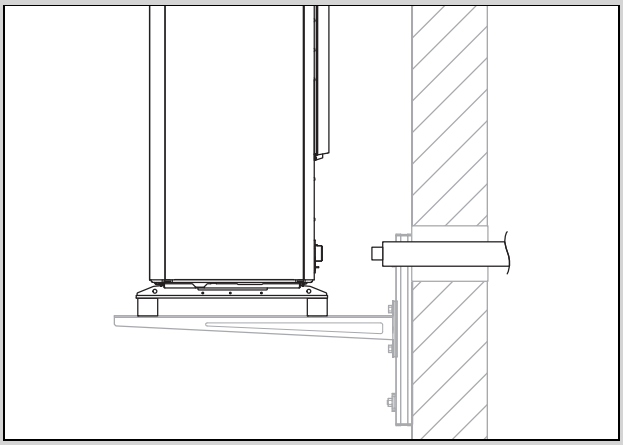

- Route the pipelines through the wall duct to the product, as shown in the figure.
- Route the pipelines from the inside outwards with a downward gradient of approx. 2°.
- You can find the dimensions and clearances in the assembly instructions for the accessories.

6.6 Connecting the pipelines to the product

1. Remove the covering caps from the hydraulic connections.

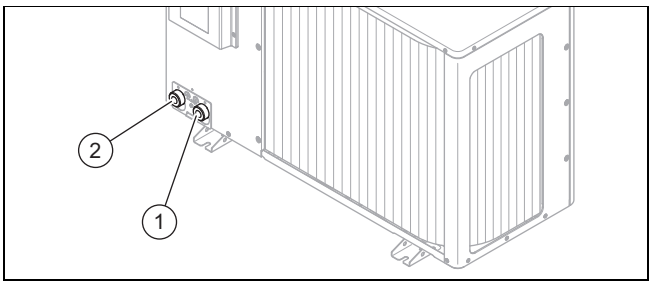

1 Heating flow, G 1 1/4″ 2 Heating return, G 1 1/4″

2. Connect the pipelines for the heating circuit.
3. If required, use the pre-installation jig and the enclosed components from the accessories.

6.7 Completing the hydraulics installation

1. Depending on the installation configuration, install additional required safety-relevant components.
2. Take into account that an expansion relief valve with a triggering pressure of 2.5 bar is included in the product.
3. Ensure that all other installed expansion relief valves in the heating circuit have a switching point of at least 3 bar while taking into consideration the maximum permissible pressure load of all of the components that are installed in the heating circuit. This also fulfils the safety concept if there is a leak in the refrigerant circuit.
4. Check all connections for tightness.

6.8 Connecting the product to a swimming pool

1. Do not connect the product's heating circuit directly to a swimming pool.
2. Use a separation heat exchanger that is suitable and the additional components that are required for this installation.

7 Electrical installation

Validity: VWL 55/7.1 A 230V S2 OR VWL 75/7.1 A 230V S2

This unit complies with IEC 61000-3-12 under the prerequisite that the short circuit line Ssc at the connection point for the customer's installation to the public grid is greater than or equal to 33. It is the responsibility of the installer or end user of the unit to ensure, if necessary after consultation with the network operator, that this unit is only connected to one connection point with an Ssc value that is greater than or equal to 33.

Validity: VWL 115/7.1 A 230V S2

This unit complies with IEC 61000-3-12 under the prerequisite that the short circuit line Ssc at the connection point for the customer's installation to the public grid is greater than or equal to 33. It is the responsibility of the installer or end user of the unit to ensure, if necessary after consultation with the network operator, that this unit is only connected to one connection point with an Ssc value that is greater than or equal to 33.

- Determine the required mains impedance for a single-phase connection (1~/230 V) of the product from the power supply network operator and check compliance with a loop impedance measurement.
- Measure the network impedance at the point at which the product is connected to the mains power:
  – Z_{max} = 0.320 Ω + j 0.200 Ω (0.320 Ω + 636 µH)
- Transfer the measured value and the permissible value Z_{max} to the energy supply company for approval of the product installation.

7.1 Preparing the electrical installation

Danger!

Risk of death from electric shock as a result of an improper electrical connection!

An improper electrical connection may negatively affect the operational safety of the product and result in material damage or personal injury.

► Only carry out the electrical installation if you are a trained competent person and are qualified for this work.

1. Observe the technical connection conditions for connecting to the energy supply company's low-voltage network.
2. Determine whether the energy supply company lockout function has been intended for the product, and how the power supply for the product should be designed, depending on the type of shutdown.
3. Use the data plate to determine the product’s rated voltage in order to connect the product to a 1~/230 V or 3~/400 V power supply.
4. Use the data plate to determine the product's rated current. Derive the suitable cable cross-sections for the electrical cables from this.
5. Prepare the routing of the electrical cables from the building and through the wall duct to the product. If the cable length exceeds 10 m, prepare the separated routing of the power supply cable and sensor/bus cables.

7.2 Requirements for the quality of the mains voltage

For the mains voltage of the single-phase 230 V network, a tolerance of +10% to -15% must be provided.

For the mains voltage of the three-phase 400 V network, a tolerance of +10% to -15% must be provided. For the voltage difference between the individual phases, a tolerance of ±2% must be provided.

7.3 Requirements for electrical components

Flexible hose lines that are suitable for routing outdoors must be used for the power supply. The specification must comply with the standard 60245 IEC 57 with the abbreviation H05RN-F as a minimum.

The electrical partitions must have a contact gap of at least 3 mm.

For the electrical fuse protection, circuit breakers with B characteristics must be used. With a three-phase power supply, the circuit breakers must be three-pole switching. With a single-phase power supply, the circuit breakers must be single-pole switching.

To protect people, type B universal-current-sensitive residual-current circuit breakers must be used if these are stipulated for the installation site. Tripping must be short-time delayed and suitable for the use of inverters (tripping characteristic > 1 kHz).

7.4 Electrical partition

The electrical partition is also referred to as a "disconnector" in these instructions. The circuit breaker that is installed in the building’s meter/fuse board is usually used as the disconnector.

7.5 Removing the cover for the electrical connections

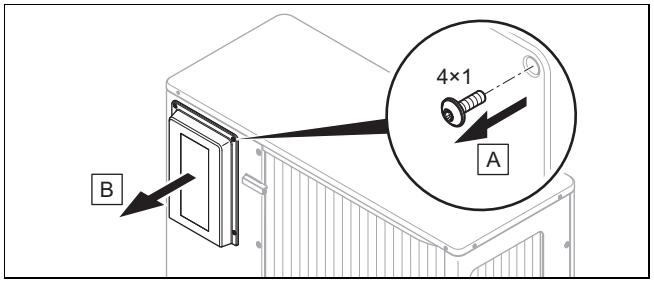

1. Note that the cover contains a safety-relevant seal which must be effective in the case of a leak in the refrigerant circuit.
2. Remove the cover, as shown in the figure, without damaging the circumferential seal.

7.6 Stripping the electrical wire

1. If required, shorten the electrical wire.

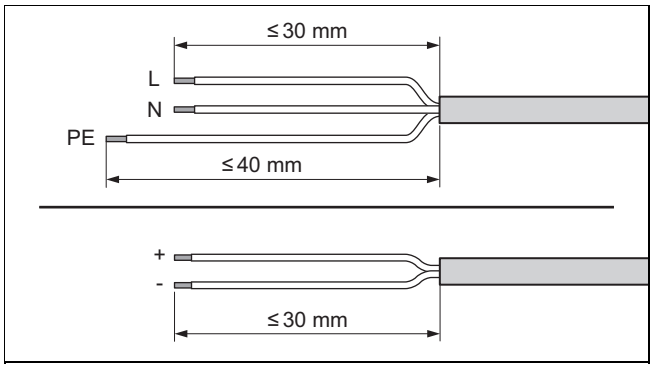

2. Strip the electrical wire as shown in the figure. In doing so, ensure that the insulation on the individual conductors is not damaged.
3. Fit conductor end sleeves on the stripped ends of the conductors.

7.7 Establishing the power supply

► Determine the type of connection:

Case	Connection type
Energy supply company lockout not provided	Single power supply
Energy supply company lockout provided, shutdown via connection S21 (indoor unit)	
Energy supply company lockout provided, shutdown via partition	Dual power supply

7.7.1 1~/230V, single power supply

1. If it is stipulated for the installation site, install one residual-current circuit breaker for the product.

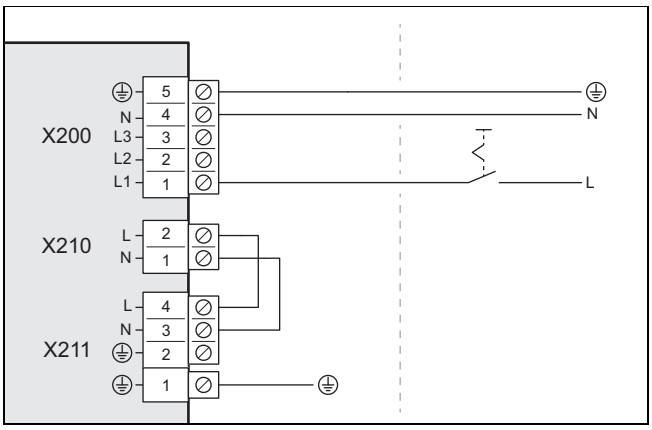

2. Install a disconnector for the product in the building, as shown in the figure.
3. Route a 3-pole power supply cable from the building and through the wall duct to the product.
4. Connect the power supply cable to connection *X200* in the electronics box.
5. Use the strain relief clamp to secure the power supply cable in place.

7.7.2 1~/230V, dual power supply

1. If it is stipulated for the installation site, install two residual-current circuit breakers for the product.

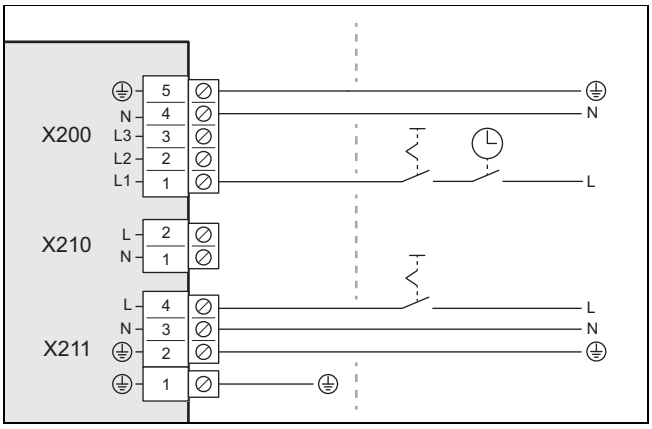

2. Install a partition for the product in the building, as shown in the figure.
3. Install two disconnectors for the product in the building, as shown in the figure.
4. Route a 3-pole power supply cable from the building and through the wall duct to the product.
5. Connect the power supply cable from the heat pump electricity meter to connection *X200*. This power supply may be temporarily switched off by the energy supply company.
6. Remove the 2-pole bridge from the *X210* connection.
7. Connect the power supply cable from the household electricity meter to connection *X211*. This power supply is constant.
8. Use the strain relief clamps to secure the power supply cables in place.

7.7.3 3~/400V, single power supply

1. If it is stipulated for the installation site, install one residual-current circuit breaker for the product.

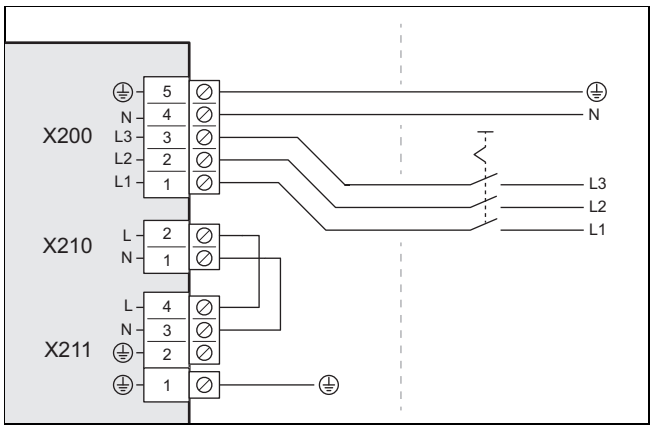

2. Install a disconnector for the product in the building, as shown in the figure.
3. Route a 5-pole power supply cable from the building and through the wall duct to the product.
4. Connect the power supply cable to connection *X200* in the electronics box.
5. Use the strain relief clamp to secure the power supply cable in place.

7.7.4 3~/400V, dual power supply

1. If it is stipulated for the installation site, install two residual-current circuit breakers for the product.

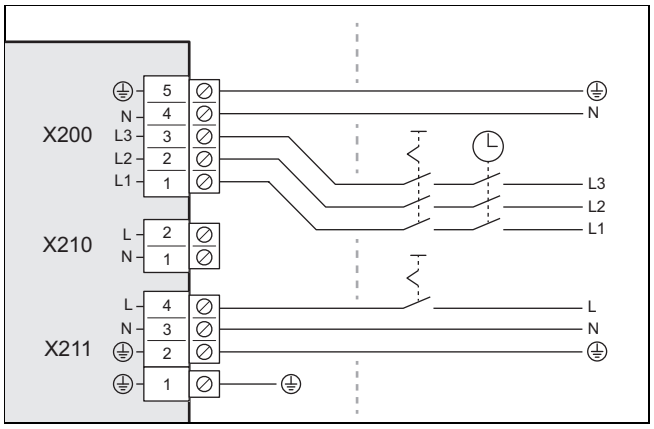

2. Install a partition for the product in the building, as shown in the figure.
3. Install two disconnectors for the product, as shown in the figure.
4. Route one 5-pole power supply cable and one 3-pole power supply cable from the building and through the wall duct to the product.
5. Connect the 5-pole power supply cable from the heat pump electricity meter to connection *X200*. This power supply may be temporarily switched off by the energy supply company.
6. Remove the 2-pole bridge from the *X210* connection.
7. Connect the 3-pole power supply cable from the household electricity meter to connection *X211*. This power supply is constant.
8. Use the strain relief clamps to secure the power supply cables in place.

7.8 Connecting the communication cable

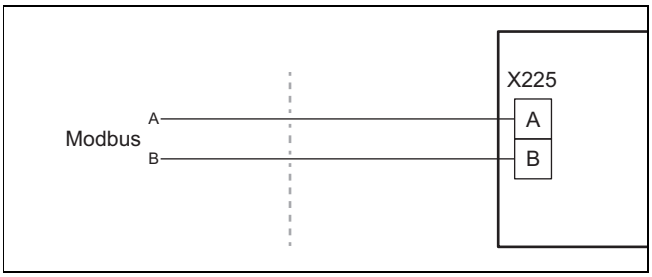

1. Ensure that connections A and B on the indoor unit are connected to connections A and B on the outdoor unit using the communication cable. To do this, use a communication cable with different conductor colours for signals A and B.
2. Use a communication cable from the accessories, or alternatively an unshielded twin-core cable with a conductor cross-section of 0.34–1.0 mm².
3. Note that the maximum length of the communication cable must not exceed 50 m.
4. Guide the communication cable from the building and through the wall duct to the product.

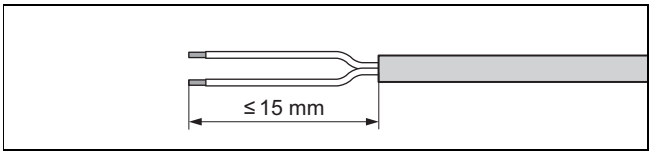

5. Strip the communication cable. In doing so, ensure that the insulation on the individual conductors is not damaged.
6. To avoid short circuits resulting from loose individual wires, fit conductor end sleeves on the stripped ends of the conductors.

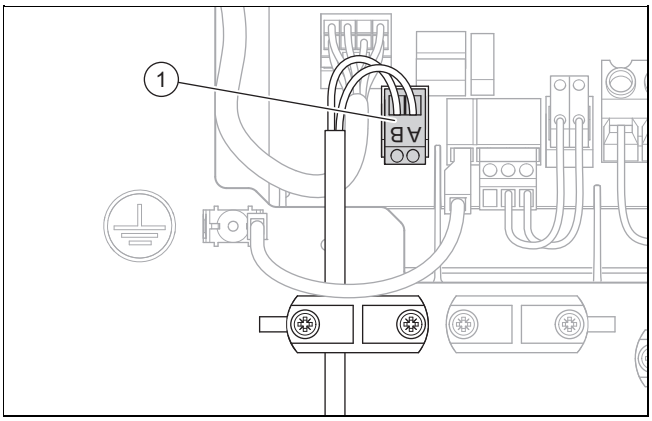

7. Connect the communication cable to the screw terminal **(1)**. In doing so, check the assignment of the conductor colours to connections A and B.
8. Connect the screw terminal to connection *X225*.
9. Use the strain relief clamp to secure the communication cable in place.

7.9 Connecting accessories

► Observe the wiring diagram in the appendix.

7.10 Installing the cover for the electrical connections

1. Note that the cover contains a safety-relevant seal which must be effective in the case of a leak in the refrigerant circuit.
2. Secure the cover by lowering it into the stop on the lower edge.
3. Use four screws to secure the cover.

8 Start-up

8.1 Checking before switching on

► Check whether all the hydraulic connections are established correctly.
► Check whether all the electrical connections are established correctly.
► Check, depending on the type of connection, whether one or two disconnectors are installed.
► If it is stipulated for the installation site, check whether a residual-current circuit breaker has been installed.
► Read through the operating instructions.
► After installation, ensure that at least 30 minutes have passed before switching on the product.
► Ensure that the cover for the electrical connections is installed.

8.2 Checking and treating the heating water/filling and supplementary water

Caution.

Risk of material damage due to poor-quality heating water

► Ensure that the heating water is of sufficient quality.

► Before filling or topping up the installation, check the quality of the heating water.

Checking the quality of the heating water

► Remove a little water from the heating circuit.
► Check the appearance of the heating water.
► If you ascertain that it contains sedimentary materials, you must desludge the installation.
► Use a magnetic rod to check whether it contains magnetite (iron oxide).
► If you ascertain that it contains magnetite, clean the installation and apply suitable corrosion-inhibition measures (e.g. fit a magnetite separator).
► Check the pH value of the removed water at 25 °C.
► If the value is below 8.2 or above 10.0, clean the installation and treat the heating water.
► Ensure that oxygen cannot get into the heating water.

Checking the filling and supplementary water

► Before filling the installation, measure the hardness of the filling and supplementary water.

Treating the filling and supplementary water

► Observe all applicable national regulations and technical rules when treating the filling and supplementary water.

Provided the national regulations and technical rules do not stipulate more stringent requirements, the following applies:

You must treat the filling and supplementary water in the following cases

– If the entire filling and supplementary water quantity during the operating life of the system exceeds three times the nominal volume of the heating installation, or
– If the pH value of the heating water is lower than 8.2 or higher than 10.0, or
– The guideline values listed in the following table are not met.

Total heat output	Water hardness at specific system volume[1)]					
	≤ 20 l/kW		> 20 l/kW ≤ 40 l/kW		> 40 l/kW	
kW	mg $CaCO_3$/l	mol/m³	mg $CaCO_3$/l	mol/m³	mg $CaCO_3$/l	mol/m³
≤ 50[2)]	None	None	≤ 30	< 300	< 3.0	< 0.05
< 50[3)]	< 300	< 3.0	150	≤ 1.5	5.0	0.05
> 50 to ≤ 200	200	< 2.0	100	≤ 1.0	5.0	0.05
> 200 to ≤ 600	150	< 1.5	5.0	0.05	5.0	0.05
> 600	5.0	0.05	5.0	0.05	5.0	0.05

1) Nominal capacity in litres/heat output; in the case of multi-boiler systems, the smallest single heat output is to be used.
2) Specific water capacity of the heat generator ≥ 0.3 l per kW.
3) Specific water capacity of the heat generator < 0.3 l per kW (e.g. circulation water heater) and installations with electrical heating elements.

Caution.
Risk of material damage if the heating water is treated with unsuitable additives.

Unsuitable additives may cause changes in the components, noises in heating mode and possibly subsequent damage.

► Do not use any unsuitable antifreeze and corrosion inhibitors, biocides or sealants.

No incompatibility with our products has been detected to date with proper use of the following additives.

► When using additives, follow the manufacturer's instructions without exception.

We accept no liability for the compatibility of any additive or its effectiveness in the rest of the heating system.

Additives for cleaning measures (subsequent flushing required)

– Adey MC3+
– Adey MC5
– Fernox F3
– Sentinel X 300
– Sentinel X 400

Additives intended to remain permanently in the installation

– Adey MC1+
– Fernox F1
– Fernox F2
– Sentinel X 100
– Sentinel X 200

Additives for frost protection intended to remain permanently in the installation

– Adey MC ZERO
– Fernox Antifreeze Alphi 11
– Sentinel X 500

► If you have used the above-mentioned additives, inform the end user about the measures that are required.
► Inform the end user about the measures required for frost protection.

8.3 Filling and purging the heating circuit

1. If you want to guarantee frost protection, do not fill the entire heating circuit with antifreeze, but rather establish a system separation.

Validity: Direct connection

► Using antifreeze that changes the viscosity of the water is not permitted. If the outdoor unit and indoor unit are operated with water, only water that complies with VDI directive 2035 must be used.
► Fill the product with heating water via the return. Slowly increase the filling pressure until the required operating pressure is reached.
  – Operating pressure: 0.15 to 0.2 MPa (1.5 to 2.0 bar)
► Activate the purge programme on the indoor unit's control. In this case, the automatic air vent in the outdoor unit is open and must not be closed after the purging process.
► Check the system pressure during the purging process. If the pressure falls, top up the heating water until the required operating pressure is reached again.

Validity: System separation

► Using antifreeze that changes the viscosity of the water is only permitted if the outdoor unit’s primary building circuit is separated from the indoor unit’s secondary building circuit.
► Fill the product and the primary heating circuit with a frost protection/water mixture (44% vol. propylene glycol and 56% vol. water) via the return. Slowly increase the filling pressure until the required operating pressure is reached.
  – Operating pressure: 0.15 to 0.2 MPa (1.5 to 2.0 bar)
► Activate the purge programme on the indoor unit's control. In this case, the automatic air vent in the outdoor unit is open and must not be closed after the purging process.
► Check the system pressure during the purging process. If the pressure falls, top up the frost protection/water mixture until the required operating pressure is reached again.
► Fill the secondary heating circuit with heating water. Slowly increase the filling pressure until the required operating pressure is reached.

– Operating pressure: 0.15 to 0.2 MPa (1.5 to 2.0 bar)

► Activate the heating pump on the indoor unit's control.

► Check the system pressure during the purging process. If the pressure falls, top up the heating water until the required operating pressure is reached again.

8.4 Operating the product

It is operated via the indoor unit's control (→ Operating instructions for the indoor unit) and via the optional system control (→ Operating instructions for the system control).

8.5 Guaranteeing frost protection

1. If no system separation for guaranteeing the frost protection is present, ensure that the product is switched on and remains switched on.
2. Ensure that no snow accumulates around the air inlet and air outlet.

8.6 Available remaining feed pressure

The characteristics apply to the heating circuit for the outdoor unit and relate to a heating water temperature of 20 °C. You can find an overview of the characteristics in the appendix. (→ Appendix A)

9 Handing over to the user

9.1 Instructing the end user

► Explain to the end user how the product operates.

► Inform the end user about whether a system separation is present and how the frost protection function is guaranteed.

► Point out, in particular, the safety warnings to the end user.

► Point out to the end user the particular risks and rules of conduct that are associated with R290 refrigerant.

► Make the end user aware of the need for regular maintenance.

► Advise the end user not to use any auxiliary equipment to accelerate the de-icing process or for cleaning other than those recommended in these instructions. Damage caused by sharp objects or naked flames must be avoided.

► Inform the end user that the operating instructions for the heat pump system are enclosed with the indoor unit.

9.2 Switching on the product

► Switch on all of the disconnectors to which the product is connected in the building.

10 Troubleshooting

10.1 Fault messages

In the event of a fault, a fault code is shown on the display of the indoor unit's control.

► Use the "Fault messages" table (→ installation instructions for the indoor unit, Appendix).

10.2 Other faults

► Use the "Troubleshooting" table (→ installation instructions for the indoor unit, Appendix).

11 Inspection and maintenance

11.1 Preparing for inspection and maintenance

► Only carry out the work if you are competent and have sufficient qualifications relating to the special features and risks of R290 refrigerant.

Danger!

Risk of death caused by fire or explosion if there is a leak in the refrigerant circuit!

The product contains the combustible refrigerant R290. In the event of a leak, escaping refrigerant may mix with air to form a flammable atmosphere. There is a risk of fire and explosion.

► If you are working on the product when it is open, before starting work, use a gas sniffer to ensure that there is no leak.

► In the case of a leak: Close the product's housing, inform the end user, and notify customer service.

► Keep all ignition sources away from the product. In particular, open flames, hot surfaces with temperatures above 470 °C, electrical devices that are not free of ignition sources, static discharges.

► Ensure that the room is sufficiently aerated around the product.

► Use a restriction to ensure that unauthorised personnel cannot enter the protective zone.

► When working in a raised position, observe the occupational safety rules (→ Section 5.13).

► Switch off all of the disconnectors to which the product is connected in the building.

► Disconnect the product from the power supply.

► Ensure that the product is still earthed.

► When working on the product, protect all electric components from spraying water.

11.2 Observing the work plan and intervals

Note

The interval for carrying out inspection and maintenance work can be extended to a maximum of 2 years if a remote monitoring system that is approved by the manufacturer for the unit is used on a permanent basis.

- Comply with the specified intervals and carry out all of the work that is mentioned.

#	Maintenance work	Interval
1	Checking the protective zone (→ Section 11.4.1)	Annually
2	Cleaning the product (→ Section 11.4.2)	Annually
3	Checking the automatic air vent and expansion relief valve (→ Section 11.4.4)	Annually
4	Checking the evaporator, fan and condensate discharge (→ Section 11.4.5)	Annually
5	Checking the refrigerant circuit (→ Section 11.4.6)	Annually
6	Checking the refrigerant circuit for tightness (→ Section 11.4.7)	Annually
7	Checking the electrical connections and electrical wires (→ Section 11.4.8)	Annually
8	Checking the small anti-vibration feet for wear (→ Section 11.4.9)	Annually after the first 3 years

11.3 Procuring spare parts

The original components of the unit were also certified as part of the CE declaration of conformity. Information about available Vaillant original spare parts is available by contacting the contact address provided on the back page of this document or via the Internet portal.

- Scan the displayed code using your smartphone in order to view further information about your product.
  - ◁ You are guided to the Internet portal.
- If you require spare parts for maintenance or repair work, use only Vaillant original spare parts.

11.4 Carrying out maintenance work

11.4.1 Checking the protective zone

- Check whether the defined protective zone is being maintained in the area close around the product. (→ Section 4.1)
- Check that no subsequent construction-related changes or installations that violate the protective zone have been implemented.

11.4.2 Cleaning the product

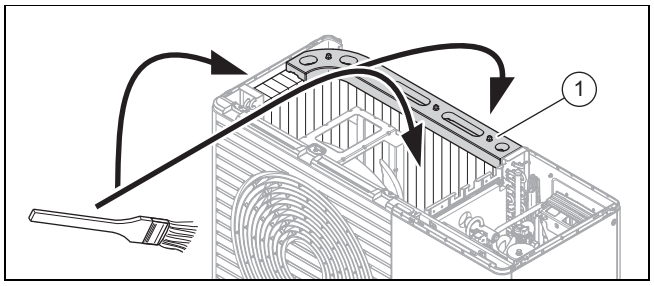

- Only clean the product when all of the casing sections and covers have been installed.
- Clean the product using a soft brush and a sponge with warm water and detergent. Avoid water temperatures above 20 °C.
- Do not clean the product with a high-pressure cleaner or a direct jet of water.
- Only use cleaning agents with a neutral pH value. Do not use abrasives or solvents. Do not use any cleaning agents that contain chlorine or ammonia.

11.4.3 Removing the casing sections

1. Before removing the casing sections, use a gas sniffer to check whether refrigerant is escaping.
2. Remove the casing sections to the extent required for the subsequent maintenance work (→ Section 5.17).

11.4.4 Checking the automatic air vent and expansion relief valve

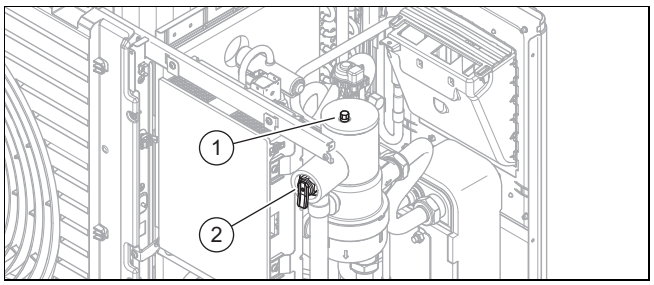

1. Check that the automatic air vent **(1)** is open.
2. Check the automatic air vent for leaks. If required, replace the refrigerant separator.
3. Check that the expansion relief valve **(2)** is working correctly.
4. Check the hydraulic components for leaks.

11.4.5 Checking the evaporator, fan and condensate discharge

1. Clean the gaps between the fins using a soft brush. In doing so, avoid fins being bent.
2. Remove any dirt and depositions.
3. If required, straighten out any bent fins using a fin comb.
4. Turn the fan by hand.
5. Check that the fan runs freely.
6. Remove the dirt that has accumulated on the condensate tray or in the condensate discharge pipe.
7. Check that the water can drain freely. Poor approx. 1 l water into the condensate tray.
8. Install an electrical pipe trace heater (optional accessory) to keep the condensate discharge pipe frost-free (→Installation instructions for the accessory).

11.4.6 Checking the refrigerant circuit

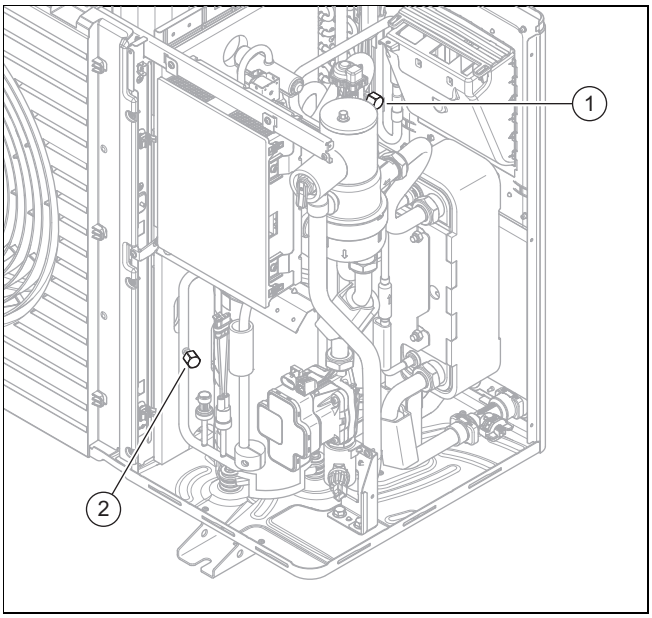

1. Check whether the components and pipelines are free from dirt and corrosion.
2. Check that the covering caps **(1)** and **(2)** on the maintenance connections are positioned securely.

11.4.7 Checking the refrigerant circuit for tightness

1. Check whether the components in the refrigerant circuit and the refrigerant pipes are free from damage, corrosion and oil leaks.
2. Check the refrigerant circuit for leak-tightness using a gas sniffer. In doing so, check all of the components and pipelines.
3. Document the result of the leak-tightness test in the service book.

11.4.8 Checking the electrical connections and electrical wires

1. On the connection box, check whether the seal is undamaged.
2. In the connection box, check that the electrical wire are seated firmly in the plugs or terminals.
3. Check the earthing in the connection box.
4. Check the power supply cable.

   Result:

   Power supply cable defective

   ► Ensure that the replacement is carried out exclusively by a person qualified for electrical work, e.g. by Vaillant customer service.
5. In the unit, check that the electrical wire are seated firmly in the plugs or terminals.
6. In the unit, check whether the electrical wires are free from damage.

11.4.9 Checking the small anti-vibration feet for wear

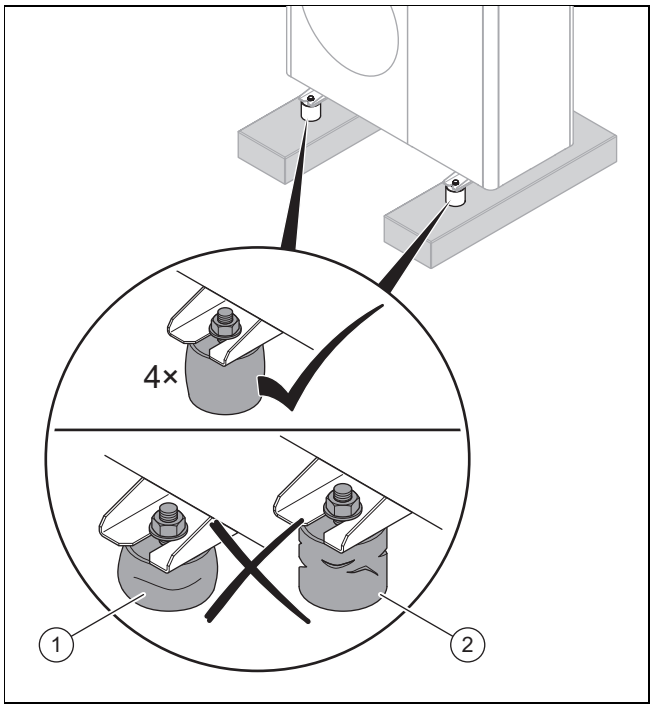

1. Check whether the anti-vibration feet are compressed **(1)** and whether the height of the anti-vibration feet is less than 40 mm.
2. Check whether the anti-vibration feet have visible cracks **(2)**.
3. Check whether there is corrosion on the screwed connection for the anti-vibration feet.
4. If one of the above three cases occurs, fit new anti-vibration feet (→ Installation instructions for the accessory).

11.5 Completing inspection and maintenance

► Installing the casing sections.
► Switch on the disconnector to which the product is connected in the building.
► Start up the product.
► Carry out an operational test and a safety test.

12 Repair and service

12.1 Preparing repair and service work on the refrigerant circuit

Only carry out work if you have specific expert refrigeration knowledge and are competent at handling R290 refrigerant.

Danger!

Risk of death caused by fire or explosion if there is a leak in the refrigerant circuit!

The product contains the combustible refrigerant R290. In the event of a leak, escaping refrigerant may mix with air to form a flammable atmosphere. There is a risk of fire and explosion.

- If you are working on the product when it is open, before starting work, use a gas sniffer to ensure that there is no leak.
- In the case of a leak: Close the product's housing, inform the end user, and notify customer service.
- Keep all ignition sources away from the product. In particular, open flames, hot surfaces with temperatures above 370 °C, electrical devices that are not free of electrical sources, static discharges.
- Ensure that the room is sufficiently aerated around the product.
- Use a restriction to ensure that unauthorised personnel cannot enter the protective zone.

- Switch off all of the disconnectors to which the product is connected in the building.
- Disconnect the product from the power supply but ensure that the product is still earthed.
- Restrict the working area and put up warning signs.
- Wear suitable personal protective equipment and bring a fire extinguisher with you.
- Use only safe units and tools that are permitted for R290 refrigerant.
- Monitor the atmosphere in the working area using a suitable gas detector that is positioned close to the floor.
- Remove all ignition sources, e.g. tools that are not spark-free. Take protective measures to prevent static discharges.
- Remove the top casing, the front casing and the right-hand side casing.

12.2 Removing refrigerant from the product

Danger!

Risk of death caused by fire or explosion when removing the refrigerant!

The product contains the combustible refrigerant R290. The refrigerant may mix with air to form a flammable atmosphere. There is a risk of fire and explosion.

- Only carry out the work if you are competent at handling R290 refrigerant.
- Wear suitable personal protective equipment and bring a fire extinguisher with you.
- Only use tools and units that are permitted for R290 refrigerant and are in proper working condition.
- Ensure that no air gets into the refrigerant circuit, into refrigerant-carrying tools or units, or into the refrigerant cylinder.
- Note that the refrigerant R290 must never be introduced into the sewage system.

---

1. If no system separation is present, remove the heating water from the condenser (heat exchanger) before the refrigerant is removed from the product.
2. Procure the tools and units that are required for removing the refrigerant:
   - Extraction station
   - Vacuum pump
   - Recycling cylinder for refrigerant
   - Manometer bridge
3. Only use tools and units that are permitted for R290 refrigerant.
4. Use only recycling cylinders that are approved for R290 refrigerant, have been labelled appropriately, and are equipped with a pressure relief and isolation valve.
5. Only use hoses, couplings and valves that are leak-tight and in proper working condition. Check the tightness using a suitable gas sniffer.
6. Drain the recycling cylinder.
7. Extract the refrigerant. Take into account the maximum fill quantity of the recycling cylinder, and monitor the fill quantity using calibrated scales.
8. Ensure that no air gets into the refrigerant circuit, into refrigerant-carrying tools or units, or into the recycling cylinder.
9. Connect the manometer bridge to both the high-pressure side and the low-pressure sides of the refrigerant circuit and make sure that the expansion valve is open in order to ensure that the refrigerant circuit is completely drained.

12.3 Removing components of the refrigerant circuit

- Flush the refrigerant circuit with nitrogen.
- Drain the refrigerant circuit.
- Repeat the process of rinsing with nitrogen and draining until there is no longer any refrigerant in the refrigerant circuit.
- If you want to remove the compressor in which the compressor oil is located, evacuate the refrigerant circuit to ensure that no flammable refrigerant remains in the compressor oil..
- Establish the atmospheric pressure.
- Use a pipe cutter to open the refrigerant circuit. Do not use soldering equipment or sparking or chipping tools.
- Remove the component.
- Note that removed components could continue to release refrigerant for a long time due to outgassing from the compressor oil contained in the components. This applies in particular for the compressor. Only store and transport these components in well-aerated locations.
- If the refrigerant circuit is opened during maintenance work, replace the filter between the electronic expansion valve and the heat exchanger with a filter and dryer unit suitable for R290 refrigerant.

12.4 Filling the product with refrigerant

Danger!

Risk of death caused by fire or explosion when filling with refrigerant!

The product contains the combustible refrigerant R290. The refrigerant may mix with air to form a flammable atmosphere. There is a risk of fire and explosion.

- ► Only carry out the work if you are competent at handling R290 refrigerant.
- ► Wear suitable personal protective equipment and bring a fire extinguisher with you.
- ► Only use tools and units that are permitted for R290 refrigerant and are in proper working condition.
- ► Ensure that no air gets into the refrigerant circuit, into refrigerant-carrying tools or units, or into the refrigerant cylinder.

1. Use only R290 refrigerant that has not been used before and is specified as such, and the purity of which is at least 99.5%.
2. Procure the tools and units that are required for filling with refrigerant:
   - Vacuum pump
   - Refrigerant cylinder
   - Scales
3. Only use tools and units that are permitted for R290 refrigerant. Only use refrigerant cylinders that are labelled accordingly.
4. Only use hoses, couplings and valves that are leak-tight and in proper working condition. Check the tightness using a suitable gas sniffer.
5. Only use hoses that are as short as possible in order to minimise the refrigerant volume that they can hold.
6. Flush the refrigerant circuit with nitrogen.
7. Drain the refrigerant circuit.
8. Fill the refrigerant circuit with R290 refrigerant. The required fill quantity is specified on the product's data plate. Ensure in particular that the refrigerant circuit is not overfilled.
9. Check the refrigerant circuit for leak-tightness using a gas sniffer. In doing so, check all of the components and pipelines.

12.5 Installing components of the refrigerant circuit

- ► Install the component correctly. To do this, use only soldering processes.
- ► Use cooling paste to protect the components from overheating during soldering.
- ► Carry out a pressure test of the refrigerant circuit using nitrogen.
- ► Check that the counterweights are attached correctly in order to prevent damage to the piping.

12.6 Completing repair and service work

- ► Installing the casing sections. (→ Section 5.18)
- ► Switch on the power supply and the product.
- ► Start up the product. Temporarily activate the heating mode.
- ► Check the product for leak-tightness using a gas sniffer.

13 Decommissioning

13.1 Temporarily decommissioning the product

Note

When the Flexible Space function is switched on, temporary decommissioning is only permitted for inspection, maintenance, repair and service.

1. Disconnect the product from the power supply. To do this, switch off all of the disconnectors to which the product is connected in the building.
2. Protect the heating installation against frost. If there is a risk of frost damage, drain the heating water from the product.

13.2 Permanently decommissioning the product

Danger!

Risk of death caused by fire or explosion when transporting units that contain refrigerant!

The product contains the combustible refrigerant R290. When transporting units without their original packaging, the refrigerant circuit may be damaged and refrigerant may be released. When mixing with air, a combustible atmosphere may form. There is a risk of fire and explosion.

- ► Ensure that the refrigerant is correctly removed from the product transport.

1. Switch off all of the disconnectors to which the product is connected in the building.
2. Disconnect the product from the power supply but ensure that the product is still earthed.
3. Drain the heating water from the product.
4. Remove the top casing, the front casing and the right-hand side casing.
5. Remove the refrigerant from the product (→ Section 12.2).
6. Note that refrigerant will continue to escape even after the refrigerant circuit is completely drained due to outgassing from the compressor oil.
7. Install the right-hand side casing, the front casing and the top casing.
8. Label the product using a sticker that is visible from the outside. Note down on the sticker that the product has been decommissioned and that the refrigerant has been completely removed. Sign the sticker and specify the date.
9. Recycle the removed refrigerant in accordance with the regulations. Note that the refrigerant must be cleaned and checked before it is used again.

10. Dispose of or recycle the product and its components in accordance with the regulations.

14 Recycling and disposal

14.1 Disposing of the packaging

- ► Dispose of the packaging correctly.
- ► Observe all relevant regulations.

14.2 Disposing of the refrigerant

Danger!

Risk of death caused by fire or explosion when transporting refrigerant!

If R290 refrigerant is released during transport, a flammable atmosphere may form when it mixes with air. There is a risk of fire and explosion.

- ► Ensure that the refrigerant is transported correctly.

- ► Ensure that the refrigerant is disposed of by a qualified competent person.

15 Customer service

15.1 Customer service

For contact details for our customer service department, you can write to the address that is provided on the back page, or you can visit www.vaillant.co.uk.

Appendix

A Available remaining feed pressure

Validity: VWL 55/7.1 A 230V S2

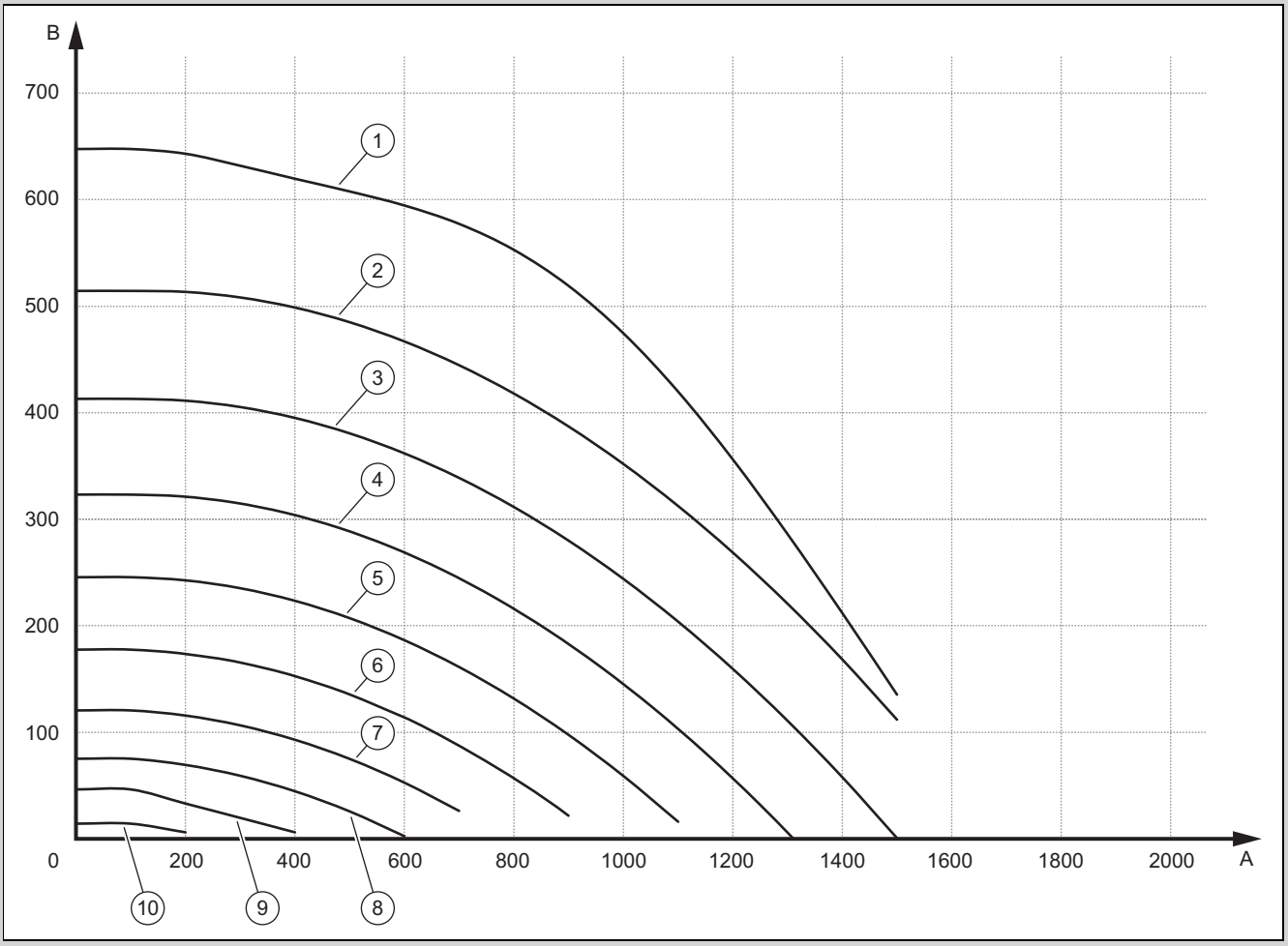

A	Volume flow, in l/h	B	Remaining feed pressure, in mbar (1000 mbar = 100 kPa)
1	100% PWM	6	50% PWM
2	90% PWM	7	40% PWM
3	80% PWM	8	30% PWM
4	70% PWM	9	20% PWM
5	60% PWM	10	10% PWM

Validity: VWL 75/7.1 A 230V S2

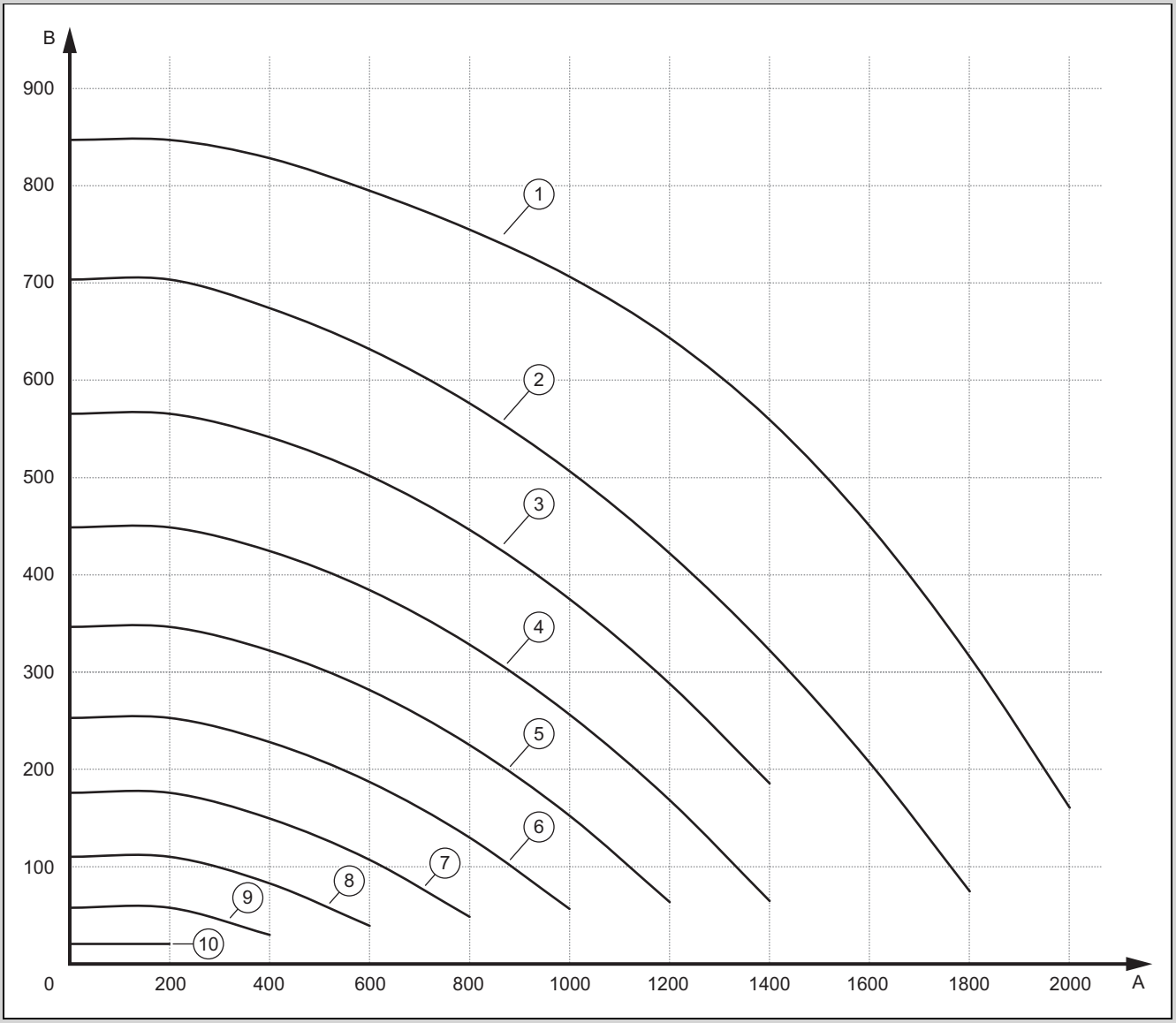

A	Volume flow, in l/h	B	Remaining feed pressure, in mbar (1000 mbar = 100 kPa)
1	100% PWM	6	50% PWM
2	90% PWM	7	40% PWM
3	80% PWM	8	30% PWM
4	70% PWM	9	20% PWM
5	60% PWM	10	10% PWM

Validity: VWL 115/7.1 A 230V S2

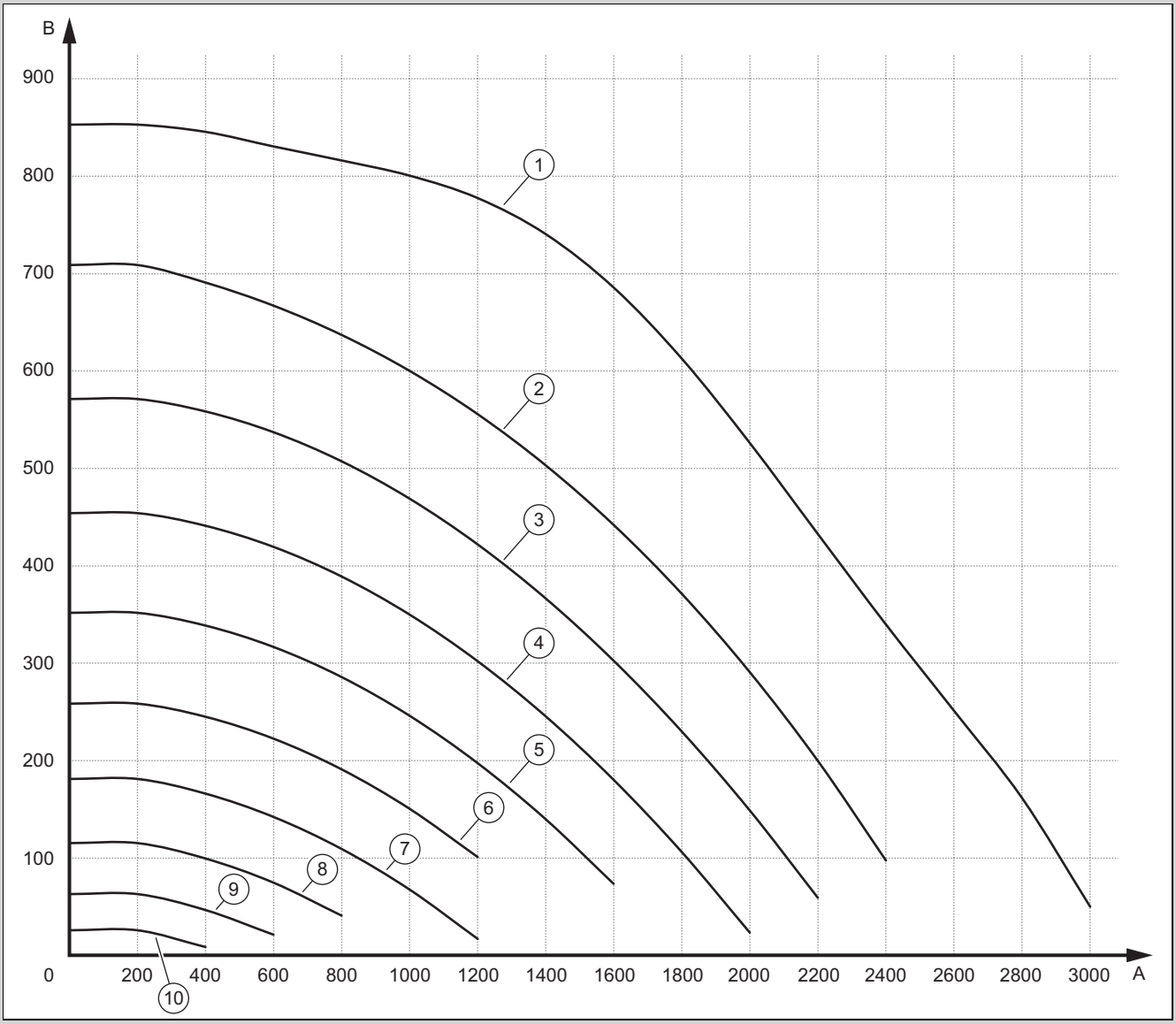

A	Volume flow, in l/h	B	Remaining feed pressure, in mbar (1000 mbar = 100 kPa)
1	100% PWM	6	50% PWM
2	90% PWM	7	40% PWM
3	80% PWM	8	30% PWM
4	70% PWM	9	20% PWM
5	60% PWM	10	10% PWM

B Functional diagram

Validity: VWL 55 OR VWL 75

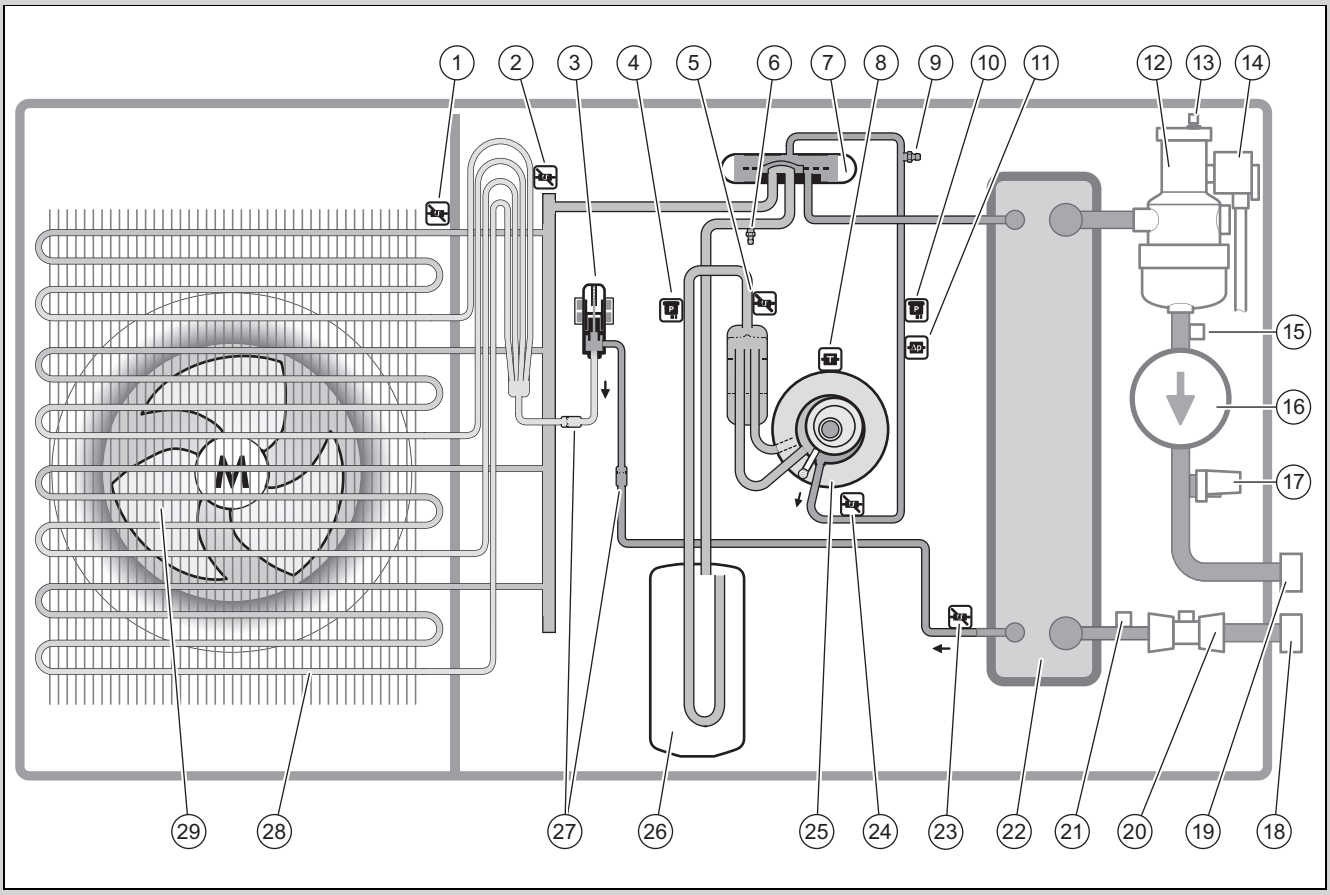

1	Temperature sensor at the air inlet	16	Heating pump
2	Temperature sensor at the evaporator	17	Pressure sensor in the heating circuit
3	Electronic expansion valve	18	Connection for heating return
4	Pressure sensor	19	Connection for heating flow
5	Temperature sensor upstream of the compressor	20	Flow rate sensor
6	Maintenance connection in the low-pressure area	21	Temperature sensor on the heating return
7	4-port diverter valve	22	Condenser
8	Temperature sensor on the compressor	23	Temperature sensor downstream of the condenser
9	Maintenance connection in the high-pressure area	24	Temperature sensor downstream of the compressor
10	Pressure sensor	25	Compressor
11	Pressure switch	26	Refrigerant buffer vessel
12	Refrigerant separator	27	Filter
13	Automatic air vent	28	Evaporator
14	Expansion relief valve	29	Fan
15	Temperature sensor on the heating flow		

Validity: VWL 115

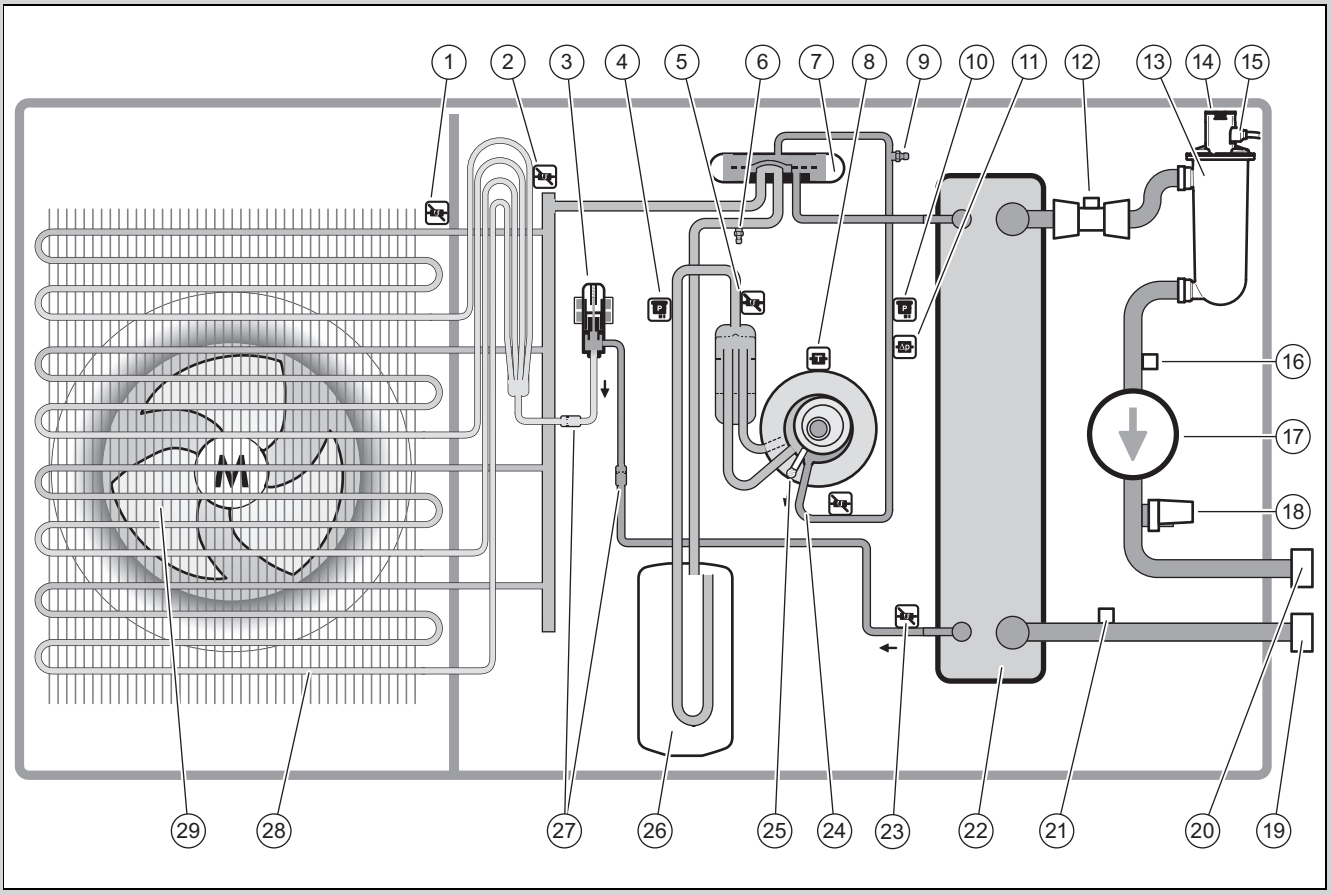

1	Temperature sensor at the air inlet	16	Temperature sensor on the heating flow
2	Temperature sensor at the evaporator	17	Heating pump
3	Electronic expansion valve	18	Pressure sensor in the heating circuit
4	Pressure sensor	19	Connection for heating return
5	Temperature sensor upstream of the compressor	20	Connection for heating flow
6	Maintenance connection in the low-pressure area	21	Temperature sensor on the heating return
7	4-port diverter valve	22	Condenser
8	Temperature sensor on the compressor	23	Temperature sensor downstream of the condenser
9	Maintenance connection in the high-pressure area	24	Temperature sensor downstream of the compressor
10	Pressure sensor	25	Compressor
11	Pressure switch	26	Refrigerant buffer vessel
12	Flow rate sensor	27	Filter
13	Refrigerant separator	28	Evaporator
14	Automatic air vent	29	Fan
15	Expansion relief valve		

C Safety devices

Validity: VWL 55 OR VWL 75

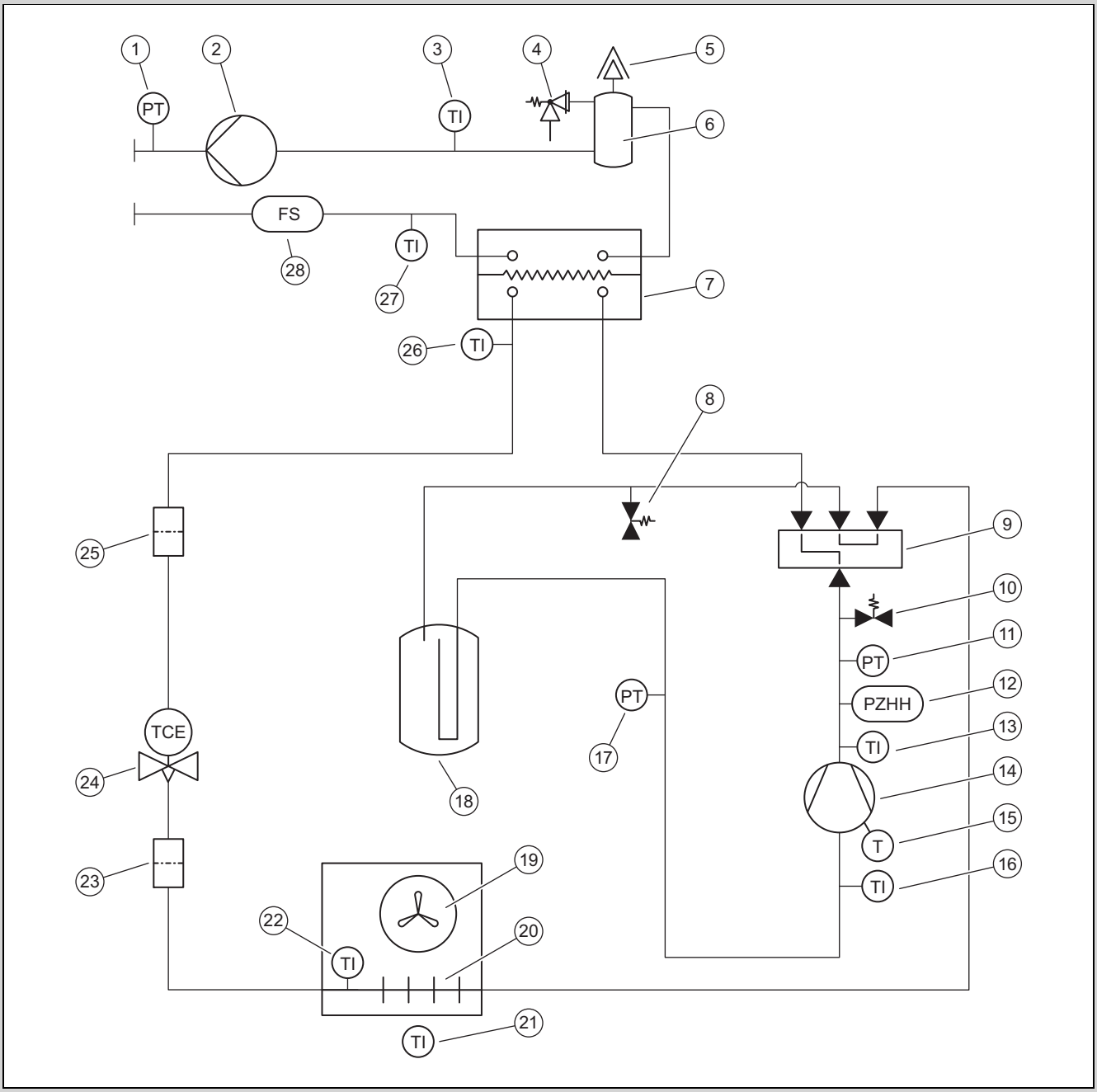

1	Pressure sensor in the heating circuit	15	Temperature monitor at the compressor
2	Heating pump	16	Temperature sensor upstream of the compressor
3	Temperature sensor on the heating flow	17	Pressure sensor in the low-pressure area
4	Expansion relief valve	18	Refrigerant buffer vessel
5	Automatic air vent	19	Fan
6	Refrigerant separator	20	Evaporator
7	Condenser	21	Temperature sensor at the air inlet
8	Maintenance connection in the low-pressure area	22	Temperature sensor at the evaporator
9	4-port diverter valve	23	Filter
10	Maintenance connection in the high-pressure area	24	Electronic expansion valve
11	Pressure sensor in the high-pressure area	25	Filter
12	Pressure switch in the high-pressure area	26	Temperature sensor downstream of the condenser
13	Temperature sensor downstream of the compressor	27	Heating return temperature sensor
14	Compressor	28	Flow rate sensor

Validity: VWL 115

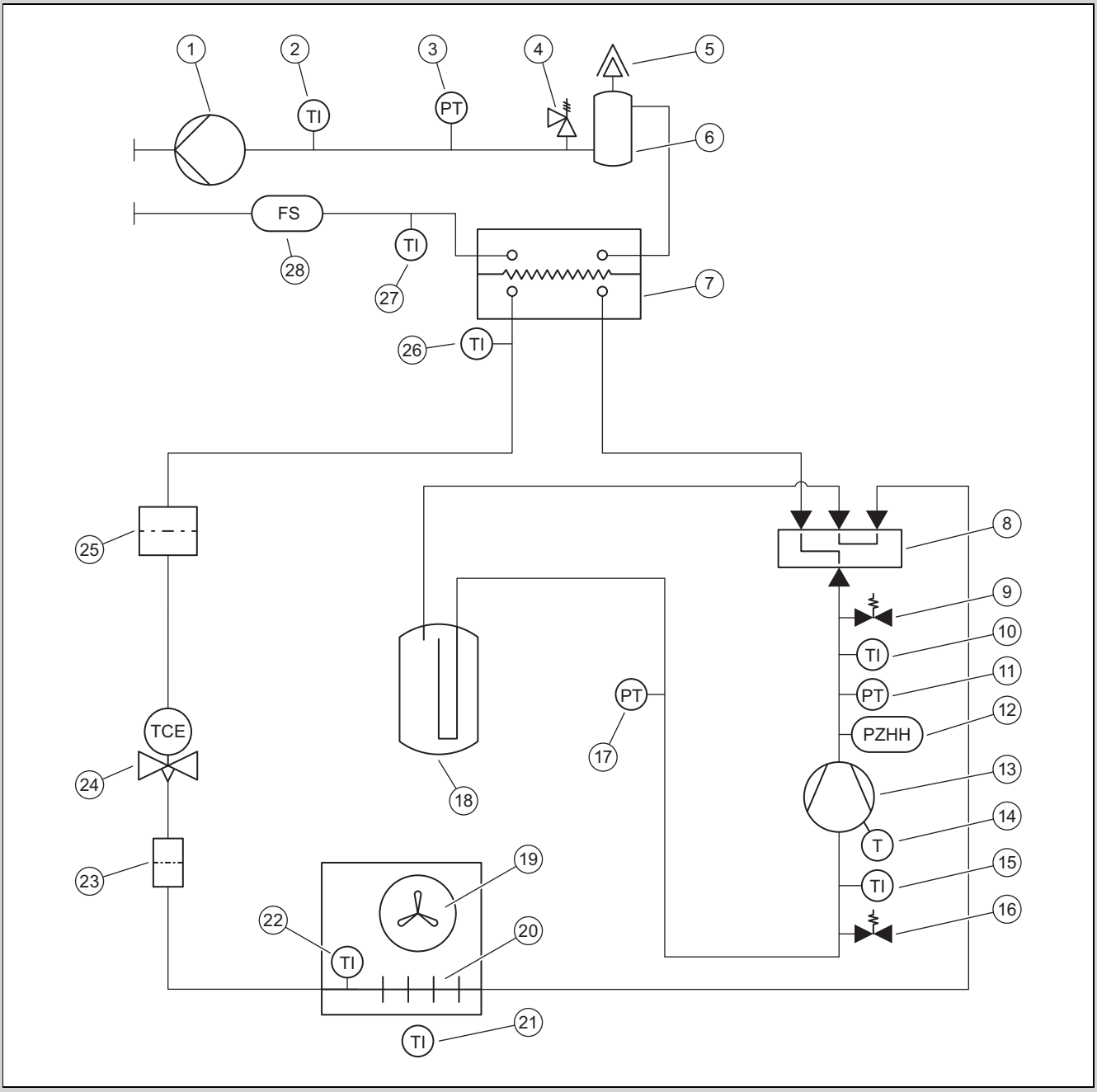

1	Heating pump	15	Temperature sensor upstream of the compressor
2	Temperature sensor on the heating flow	16	Maintenance connection in the low-pressure area
3	Pressure sensor in the heating circuit	17	Pressure sensor in the low-pressure area
4	Expansion relief valve	18	Refrigerant buffer vessel
5	Automatic air vent	19	Fan
6	Separator	20	Evaporator
7	Condenser	21	Temperature sensor at the air inlet
8	4-port diverter valve	22	Temperature sensor at the evaporator
9	Maintenance connection in the high-pressure area	23	Filter
10	Temperature sensor downstream of the compressor	24	Electronic expansion valve
11	Pressure sensor in the high-pressure area	25	Filter
12	Pressure switch in the high-pressure area	26	Temperature sensor downstream of the condenser
13	Compressor	27	Heating return temperature sensor
14	Temperature monitor at the compressor	28	Flow rate sensor

D Wiring diagram

D.1 Wiring diagram, power supply

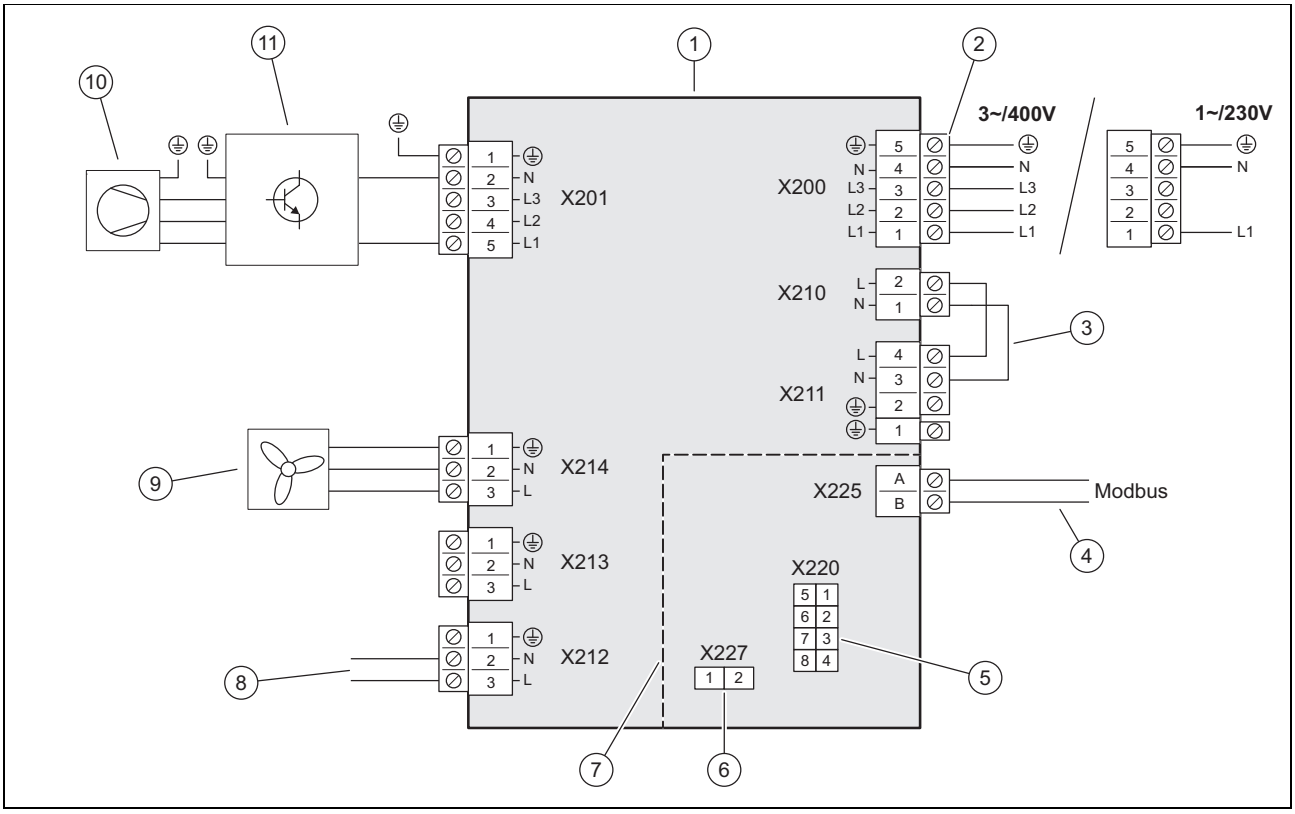

1	INSTALLER BOARD PCB	6	Slot for coding resistor for cooling mode
2	Power supply connection	7	Range for the safety extra-low voltage (SELV)
3	Bridge, depending on the type of connection (energy supply company lockout)	8	Connection to the HMU PCB, power supply
4	Modbus cable connection	9	Power supply for fan
5	Connection to the HMU PCB, data line	10	Compressor
		11	INVERTER assembly

D.2 Wiring diagram, sensors and actuators

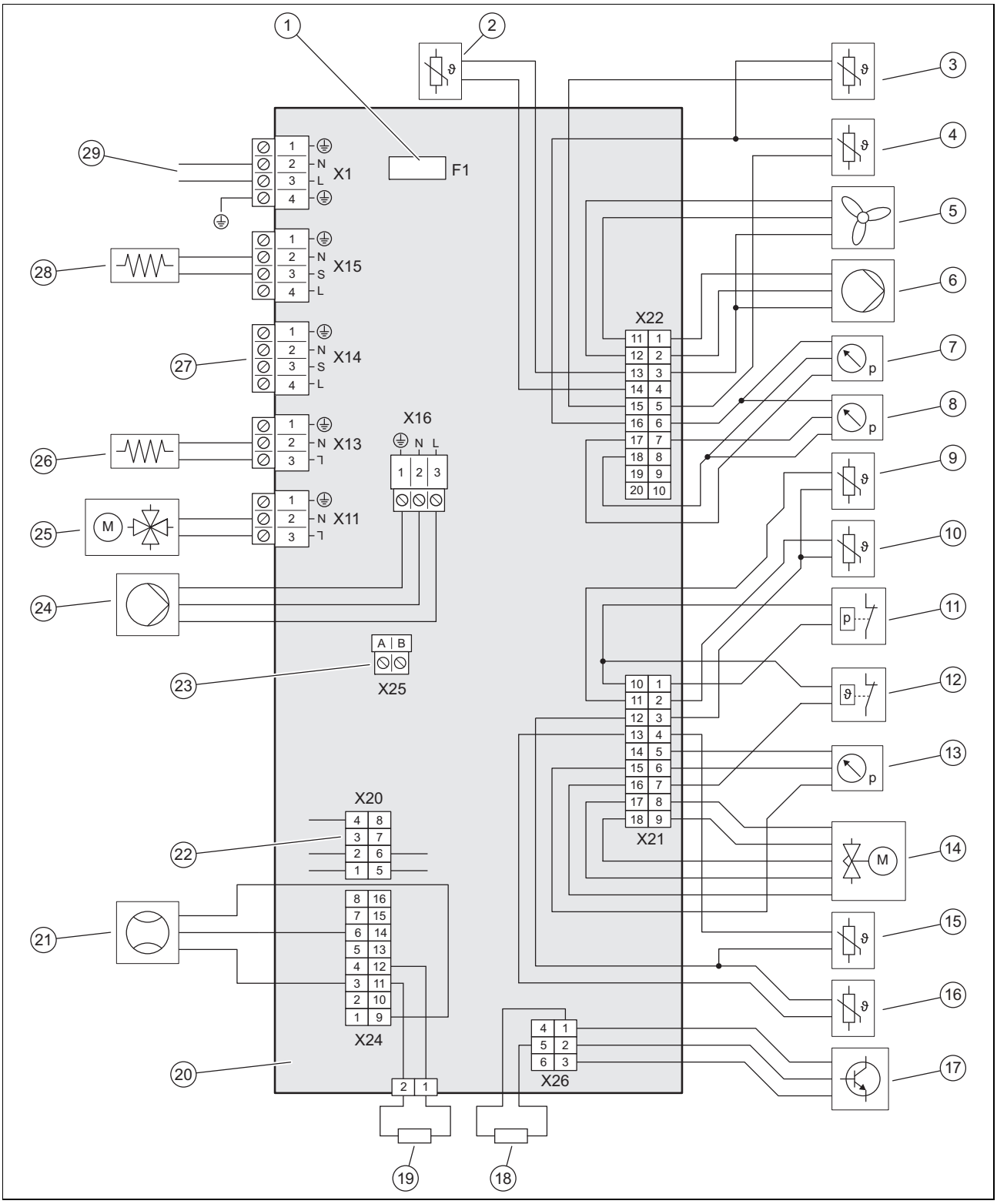

1	Fuse	11	Pressure switch in the high-pressure area
2	Temperature sensor at the air inlet	12	Temperature monitor in the compressor outlet
3	Temperature sensor on the heating return	13	Pressure switch in the high-pressure area
4	Temperature sensor on the heating flow	14	Electronic expansion valve
5	Actuator for the fan	15	Temperature sensor at the evaporator
6	Actuator for the heating pump	16	Temperature sensor downstream of the condenser
7	Pressure sensor in the heating circuit	17	Modbus to the inverter
8	Pressure sensor in the low-pressure area	18	Coding resistor for detecting the unit type
9	Compressor outlet temperature sensor	19	Coding resistor for detecting the unit type
10	Compressor inlet temperature sensor	20	HMU PCB

21	Flow rate sensor	26	Condensate tray heater
22	INSTALLER BOARD PCB data line	27	Power supply for accessories
23	Modbus to the indoor unit	28	Crankcase heater
24	Heating pump power supply	29	HMU PCB power supply
25	4-port diverter valve		

E Technical data

Note

The following performance data is only applicable to new products with clean heat exchangers and a previous minimum compressor operating time of 72 hours.

The performance data also covers noise reduction mode.

The data in accordance with EN 14825 is determined using a special test method. You can find information about this from the manufacturer of the product by stating "EN 14825 test method".

Technical data – General

	VWL 55/7.1 A 230V S2	VWL 75/7.1 A 230V S2	VWL 115/7.1 A 230V S2
Width	1,104 mm	1,104 mm	1,169 mm
Height	750 mm	750 mm	1,103 mm
Depth	454 mm	454 mm	454 mm
Weight, with packaging	101.3 kg	107.6 kg	150.2 kg
Weight, ready for operation	84.5 kg	90.9 kg	133.3 kg
Weight, ready for operation, left-/right-hand side	28.5 kg/56 kg	30 kg/60.9 kg	44.3 kg/89 kg
Connection, heating circuit	G 1 1/4″	G 1 1/4″	G 1 1/4″
Rated voltage	230 V (+10%/-15%), 50 Hz, 1~/N/PE	230 V (+10%/-15%), 50 Hz, 1~/N/PE	230 V (+10%/-15%), 50 Hz, 1~/N/PE
Rated power, maximum	3.2 kW	3.5 kW	5.7 kW
Rated power factor	0.95	0.95	0.95
Rated current, maximum	14 A	15 A	25 A
IP rating	IPX4	IPX4	IPX4
Protection class	I	I	I
Electrical fuse protection	Characteristic B, single-pole switching	Characteristic B, single-pole switching	Characteristic B, single-pole switching
Fan, power consumption, maximum	32 W	60 W	115 W
Fan, power consumption, minimum	15 W	15 W	35 W
Fan, rotational speed, maximum	575 rpm	630 rpm	550 rpm
Fan, air flow, maximum	1,950 m³/h	2,650 m³/h	4,100 m³/h
Heating pump, power consumption	2 to 54 W	3 to 87 W	3 to 87 W

Technical data – Heating circuit

	VWL 55/7.1 A 230V S2	VWL 75/7.1 A 230V S2	VWL 115/7.1 A 230V S2
Heating water temperature, minimum/maximum	10 to 70 °C	10 to 70 °C	10 to 70 °C
Operating pressure, minimum	0.3 bar	0.3 bar	0.3 bar
Operating pressure, maximum	2.5 bar	2.5 bar	2.5 bar
Volume flow, minimum	520 l/h	640 l/h	1,225 l/h
Volume flow, maximum	860 l/h	1,275 l/h	2,445 l/h
Water volume, in the outdoor unit	1.66 l	1.78 l	4.31 l

Technical data – Refrigerant circuit

	VWL 55/7.1 A 230V S2	VWL 75/7.1 A 230V S2	VWL 115/7.1 A 230V S2
Refrigerant, type	R290	R290	R290
Refrigerant, fill quantity	0.50 kg	0.60 kg	1.05 kg
Refrigerant, Global Warming Potential (GWP)	0.02	0.02	0.02
Refrigerant, CO_2 equivalent	0.00001 t	0.000012 t	0.000021 t
Permissible operating pressure, maximum	31.5 MPa	31.5 MPa	31.5 MPa
Compressor, type	Rotary compressor	Rotary compressor	Rotary compressor
Compressor, oil type	Specific polyalkylene glycol (PAG)	Specific polyalkylene glycol (PAG)	Specific polyol ester (POE)
Compressor, oil volume	0.20 l	0.35 l	1.15 l
Compressor, control	Electronic	Electronic	Electronic

Technical data – Power, heating mode

	VWL 55/7.1 A 230V S2	VWL 75/7.1 A 230V S2	VWL 115/7.1 A 230V S2
Heat output, A2/W35	2.36 kW	3.50 kW	6.45 kW
Coefficient of performance, COP, EN 14511, A2/W35	4.21	4.15	4.34
Heat output, minimum/maximum, A2/W35	2.08 to 5.48 kW	1.87 to 8.45 kW	2.15 to 13.26 kW
Heat output, A2/W45	3.57 kW	5.85 kW	6.53 kW
Coefficient of performance, COP, EN 14511, A2/W45	3.24	3.03	3.06
Heat output, minimum/maximum, A2/W45	1.83 to 5.5 kW	1.69 to 8.49 kW	2.54 to 13.14 kW
Heat output, A2/W55	2.56 kW	4.22 kW	6.54 kW
Coefficient of performance, COP, EN 14511, A2/W55	2.56	2.55	2.67
Heat output, minimum/maximum, A2/W55	1.62 to 5.32 kW	1.53 to 7.10 kW	2.89 to 11.59 kW
Heat output, A7/W35	3.36 kW	4.48 kW	7.43 kW
Coefficient of performance, COP, EN 14511, A7/W35	4.93	4.83	5.22
Heat output, minimum/maximum, A7/W35	1.71 to 6.06 kW	2.11 to 10.51 kW	2.48 to 14.90 kW
Coefficient of performance, COP, EN 14511, A7/W45	3.17	3.16	3.63
Heat output, minimum/maximum, A7/W45	1.50 to 6.21 kW	1.92 to 10.09 kW	2.91 to 14.98 kW
Heat output, A7/W55	6.35 kW	6.67 kW	8.49 kW
Coefficient of performance, COP, EN 14511, A7/W55	2.99	2.92	3.10
Heat output, minimum/maximum, A7/W55	1.32 to 6.34 kW	1.77 to 7.78 kW	3.30 to 12.37 kW
Heat output, maximum, A7/W65	6.55 kW	6.85 kW	11.54 kW
Coefficient of performance, COP, EN 14511, A7/W65	2.57	2.30	2.59
Heat output, A-7/W35	4.84 kW	6.37 kW	10.51 kW
Coefficient of performance, COP, EN 14511, A-7/W35	2.91	2.66	2.46
Heat output, maximum, A-7/W35	4.84 kW	6.37 kW	11.08 kW
Coefficient of performance, COP, EN 14511, A-7/W45	2.45	2.34	2.33
Heat output, maximum, A-7/W45	4.78 kW	6.52 kW	10.73 kW
Heat output, A-7/W55	4.78 kW	6.11 kW	9.43 kW
Coefficient of performance, COP, EN 14511, A-7/W55	2.14	2.08	2.07
Heat output, maximum, A-7/W55	4.77 kW	6.04 kW	9.45 kW
Heat output, maximum, A-7/W65	4.31 kW	5.49 kW	8.36 kW
Coefficient of performance, COP, EN 14511, maximum, A-7/W65	1.81	1.75	1.87

Technical data – Power, cooling mode

	VWL 55/7.1 A 230V S2	VWL 75/7.1 A 230V S2	VWL 115/7.1 A 230V S2
Cooling output, A35/W18	–	–	–
Energy efficiency ratio, EER, EN 14511, A35/W18	–	–	–

	VWL 55/7.1 A 230V S2	VWL 75/7.1 A 230V S2	VWL 115/7.1 A 230V S2
Cooling output, minimum/maximum, A35/W18	–	–	–
Cooling output, A35/W7	–	–	–
Energy efficiency ratio, EER, EN 14511, A35/W7	–	–	–
Cooling output, minimum/maximum, A35/W7	–	–	–

Technical data – Power in noise reduction mode, heating mode

	VWL 55/7.1 A 230V S2	VWL 75/7.1 A 230V S2	VWL 115/7.1 A 230V S2
Heat output, EN 14511, A-7/W35, 40% noise reduction mode	2.75 kW	3.76 kW	6.92 kW
Coefficient of performance, COP, EN 14511, A-7/W35, noise reduction mode 40%	3.49	3.15	2.60
Heat output, EN 14511, A-7/W35, 50% noise reduction mode	2.29 kW	3.12 kW	5.72 kW
Coefficient of performance, COP, EN 14511, A-7/W35, noise reduction mode 50%	3.44	3.21	2.64
Heat output, EN 14511, A-7/W35, 60% noise reduction mode	1.95 kW	2.86 kW	5.21 kW
Coefficient of performance, COP, EN 14511, A-7/W35, noise reduction mode 60%	3.40	3.23	2.69

Technical data – Sound emissions, heating mode

	VWL 55/7.1 A 230V S2	VWL 75/7.1 A 230V S2	VWL 115/7.1 A 230V S2
Sound power, EN 12102-1, EN ISO 3745, ERP	49.0 dB(A)	49.0 dB(A)	54.8 dB(A)
Sound power, EN 12102, EN 14511 LWA, A-7/W35, 40% noise reduction mode	53.1 dB(A)	55.9 dB(A)	59.1 dB(A)
Sound power, EN 12102, EN 14511 LWA, A-7/W35, 50% noise reduction mode	50.8 dB(A)	52.1 dB(A)	57.3 dB(A)
Sound power, EN 12102, EN 14511 LWA, A-7/W35, 60% noise reduction mode	48.2 dB(A)	49.9 dB(A)	55.1 dB(A)
Sound power, maximum, EN 12102-1, EN ISO 3745	57.7 dB	60.9 dB	65.6 dB

Technical data – Sound emissions, cooling mode

	VWL 55/7.1 A 230V S2	VWL 75/7.1 A 230V S2	VWL 115/7.1 A 230V S2
Sound power, EN 12102, EN 14511 LWA, A35/W18	–	–	–
Sound power, EN 12102, EN 14511 LWA, A35/W7	–	–	–

Benchmark Commissioning & Warranty Validation Service Record

It is a requirement that the heat pump is installed and commissioned to the manufacturers' instructions and the data fields on the commissioning checklist completed in full.

To instigate the warranty the heat pump needs to be registered with the manufacturer within one month of the installation. The warranty rests with the end-user (consumer), and they should be made aware it is ultimately their responsibility to register with the manufacturer, within the allotted time period.

It is essential that the heat pump is serviced in line with the manufacturers' recommendations, at least annually. This must be carried out by a competent, certified operative. The service details should be recorded on the Benchmark Service and Interim Heat Pump Work Record and left with the householder. Failure to comply with the manufacturers' servicing instructions and requirements will invalidate the warranty.

benchmark
COLLECTIVE MARK
THE MARK OF QUALITY FOR THE INSTALLATION, COMMISSIONING AND SERVICING OF DOMESTIC HEATING AND HOT WATER SYSTEMS

www.hhic.co.uk

This Commissioning Checklist is to be completed in full by the competent person who commissioned the heat pump and associated equipment as a means of demonstrating compliance with the appropriate Building Regulations and then handed to the customer to keep for future reference.

Failure to install and commission according to the manufacturers' instructions and complete this Benchmark Commissioning Checklist will invalidate the warranty. This does not affect the customer's statutory rights.

* All installations in England and Wales must be notified to Local Authority Building Control (LABC) either directly or through a Competent Persons Scheme. A Building Regulations Compliance Certificate will then be issued to the customer.

© Heating and Hotwater Industry Council (HHIC)

benchmark
COLLECTIVE MARK
THE MARK OF QUALITY FOR THE INSTALLATION, COMMISSIONING AND SERVICING OF DOMESTIC HEATING AND HOT WATER SYSTEMS

www.hhic.org.uk
Issue date: 20.08.2020

AIR TO WATER HEAT PUMP COMMISSIONING CHECKLIST

Address:				
Heat Pump make and model:				
Heat Pump serial number:				
Commissioned by (PRINT NAME):			Certified Operative Reg number (1):	
Company name:			Telephone number:	
Company email:			Company address:	
			Commissioning date:	
Heating and hot water system complies with the appropriate Building Regulations?			Yes	
DNO notification?			Yes	
Building Regulations Notification Number (if applicable) (2)				
MCS installer registration Number (if applicable)			MCS product certification number (if applicable)	
F-gas certification number (split heat pump only)				
G3 certification number (if applicable)				
Heat Pump Type (Tick)	Split	Monoblock	Peak heat loss of building kW	
Is Heat Pump Installed as part of a cascade?	Yes		Cascade Heat Pump Series	( ) of ( )
Heat Pump Refrigerant Type			Refrigerant weight (total)	kg

Electrical and Hydronic Controls – SYSTEM AND HEAT PUMP (Tick the appropriate boxes)				
Time and temperature control to heating	Room thermostat and programmer/timer		Programmable Roomstat	
	Load/weather compensation		Optimum start control	
Time and temperature control to hot water	Cylinder thermostat and programmer/timer		Combined with Heat pump main controls	
Hybrid system – synchronised control of boiler and heat pump fitted			Yes	
If Yes – boiler model switching point – (Quote Tariff or Temperature Level)				

Heating zone valves (including underfloor loops)	pre-existing		Fitted		Not required	
Hot water zone valves	pre-existing		Fitted		Not required	
Thermostatic radiator valves	pre-existing		Fitted		Not required	
Outdoor Sensor	pre-existing		Fitted		Not required	
Heat Pump Safety Interlock (3)	pre-existing		Fitted		Not required	
Automatic bypass to system	pre-existing		Fitted		Not required	

Buffer Vessel Fitted	Yes		No		If yes volume:	Litres	
Plate Heat Exchanger fitted to give hydronic separation of the heat pump circuit to the heating circuit					Yes	No	
Expansion vessel for heating is sized, fitted & charged in accordance with manufacturer's instructions						Yes	
Legionella protection for stored hot water provided by timed temperature control?						Yes	

Water Treatment – SYSTEM AND HEAT PUMP (Tick the appropriate boxes/Measure and Record)						
System has been cleaned and treated in accordance with BS 7593:2019 and heat pump manufacturers' instructions?					Yes	
What system cleaner was used?	Brand:		Product:			
What heating system inhibitor was used?	Brand:		Product:			
What heat pump system anti-freeze/inhibitor was used? (monoblock only)	Brand:		Product:		% concentration	
System filter fitted in accordance with BS7593 : 2019?					Yes	

Heat Pump outdoor unit (Tick the appropriate boxes/Measure and Record)						
Is the heating system adequately frost protected and pipes insulated to prevent heat loss?					Yes	
Split only: The refrigerant circuit has been evacuated and charged in accordance with manufacturer's instructions					Yes	
The heat pump is fitted on a solid/stable surface capable of taking its weight					Yes	
The necessary heat pump defrost provision been put in place					Yes	
The heat pump fan free from obstacles and operational					Yes	
Condensate drain installed to manufacturer's instructions					Yes	

CENTRAL HEATING MODE (Tick the appropriate boxes/Measure and Record)						
The heating system has been filled and pressure tested					Yes	
Heating Flow Temperature		°C	Heating Return Temperature			°C
System correctly balance/rebalanced					Yes	

DOMESTIC HOT WATER MODE (Tick the appropriate boxes)									
Is the heat pump connected to a hot water cylinder?		Unvented		Vented		Thermal Store		Not connected	
Hot water cylinder size		Litres	Stored hot water temperature						°C
Hot water has been checked at all outlets		Yes	Have Thermostatic Blending Valves been fitted?			Yes		Not required	

* All installations in England and Wales must be notified to Local Authority Building Control (LABC) either directly or through a Competent Persons Scheme. A Building Regulations Compliance Certificate will then be issued to the customer.

© Heating and Hotwater Industry Council (HHIC)

benchmark COLLECTIVE MARK
THE MARK OF QUALITY FOR THE INSTALLATION, COMMISSIONING AND SERVICING OF DOMESTIC HEATING AND HOT WATER SYSTEMS

www.hhic.org.uk
Issue date: 20.08.2020

ADDITIONAL SYSTEM INFORMATON (Tick the appropriate boxes/Measure and Record)										
Water flow rate setting of the heat pump at commissioning (l/min):										
Additional heat sources connected:		Gas Boiler		Oil Boiler		Electric Heater		Solar Thermal		Other:

ALL INSTALLATIONS		
All electrical work complies with the appropriate Regulations	Yes	
The heat pump and associated products have been installed and commissioned in accordance with the manufacturer's instructions	Yes	
The operation of the heat pump and system controls have been demonstrated to and understood by the customer	Yes	
The manufacturer's literature, including Benchmark Checklist and Service Record, has been explained and left with the customer	Yes	
Commissioning Engineer's signature:		
Customer's signature (To confirm satisfactory demonstration and receipt of manufacturers' literature)		

* All installations in England and Wales must be notified to Local Authority Building Control (LABC) either directly or through a Competent Persons Scheme. A Building Regulations Compliance Certificate will then be issued to the customer.

© Heating and Hotwater Industry Council (HHIC)

benchmark
COLLECTIVE MARK
THE MARK OF QUALITY FOR THE INSTALLATION, COMMISSIONING AND SERVICING OF DOMESTIC HEATING AND HOT WATER SYSTEMS

www.hhic.org.uk
Issue date: 20.08.2020

SERVICE RECORD

It is recommended that your heating system is serviced regularly and that the appropriate Service Interval Record is completed.

Service provider

Before completing the appropriate Service Record below, please ensure you have carried out the service as described in the manufacturer's instructions.

Always use the manufacturer's specified spare part when replacing controls.

*A System inhibitor efficacy test is required on every annual service in accordance with the manufacturers' instructions and BS 7593. It is only acceptable to not have undertaken this if the service engineers attendance visit was in between annual services to attend a non-water facing component.

SERVICE 01	Date:	
Engineer name:		
Company name:		
Telephone No:		
Operative ID No:		
System inhibitor concentration has been checked and appropriate action taken, in accordance with BS 7593 and heat pump manufacturers' instructions. *	Yes	N/a
Comments:		
Signature:		

SERVICE 01	Date:	
Engineer name:		
Company name:		
Telephone No:		
Operative ID No:		
System inhibitor concentration has been checked and appropriate action taken, in accordance with BS 7593 and heat pump manufacturers' instructions. *	Yes	N/a
Comments:		
Signature:		

SERVICE 01	Date:	
Engineer name:		
Company name:		
Telephone No:		
Operative ID No:		
System inhibitor concentration has been checked and appropriate action taken, in accordance with BS 7593 and heat pump manufacturers' instructions. *	Yes	N/a
Comments:		
Signature:		

SERVICE 01	Date:	
Engineer name:		
Company name:		
Telephone No:		
Operative ID No:		
System inhibitor concentration has been checked and appropriate action taken, in accordance with BS 7593 and heat pump manufacturers' instructions. *	Yes	N/a
Comments:		
Signature:		

SERVICE 01	Date:	
Engineer name:		
Company name:		
Telephone No:		
Operative ID No:		
System inhibitor concentration has been checked and appropriate action taken, in accordance with BS 7593 and heat pump manufacturers' instructions. *	Yes	N/a
Comments:		
Signature:		

SERVICE 01	Date:	
Engineer name:		
Company name:		
Telephone No:		
Operative ID No:		
System inhibitor concentration has been checked and appropriate action taken, in accordance with BS 7593 and heat pump manufacturers' instructions. *	Yes	N/a
Comments:		
Signature:		

* All installations in England and Wales must be notified to Local Authority Building Control (LABC) either directly or through a Competent Persons Scheme. A Building Regulations Compliance Certificate will then be issued to the customer.

© Heating and Hotwater Industry Council (HHIC)

benchmark COLLECTIVE MARK
THE MARK OF QUALITY FOR THE INSTALLATION, COMMISSIONING AND SERVICING OF DOMESTIC HEATING AND HOT WATER SYSTEMS

www.hhic.org.uk
Issue date: 20.08.2020

SERVICE RECORD

It is recommended that your heating system is serviced regularly and that the appropriate Service Interval Record is completed.

Service provider

Before completing the appropriate Service Record below, please ensure you have carried out the service as described in the manufacturer's instructions.

Always use the manufacturer's specified spare part when replacing controls.

*A System inhibitor efficacy test is required on every annual service in accordance with the manufacturers' instructions and BS 7593. It is only acceptable to not have undertaken this if the service engineers attendance visit was in between annual services to attend a non-water facing component.

SERVICE 01	Date:	
Engineer name:		
Company name:		
Telephone No:		
Operative ID No:		
System inhibitor concentration has been checked and appropriate action taken, in accordance with BS 7593 and heat pump manufacturers' instructions. *	Yes	N/a
Comments:		
Signature:		

SERVICE 01	Date:	
Engineer name:		
Company name:		
Telephone No:		
Operative ID No:		
System inhibitor concentration has been checked and appropriate action taken, in accordance with BS 7593 and heat pump manufacturers' instructions. *	Yes	N/a
Comments:		
Signature:		

SERVICE 01	Date:	
Engineer name:		
Company name:		
Telephone No:		
Operative ID No:		
System inhibitor concentration has been checked and appropriate action taken, in accordance with BS 7593 and heat pump manufacturers' instructions. *	Yes	N/a
Comments:		
Signature:		

SERVICE 01	Date:	
Engineer name:		
Company name:		
Telephone No:		
Operative ID No:		
System inhibitor concentration has been checked and appropriate action taken, in accordance with BS 7593 and heat pump manufacturers' instructions. *	Yes	N/a
Comments:		
Signature:		

* All installations in England and Wales must be notified to Local Authority Building Control (LABC) either directly or through a Competent Persons Scheme. A Building Regulations Compliance Certificate will then be issued to the customer.

© Heating and Hotwater Industry Council (HHIC)

benchmark COLLECTIVE MARK
THE MARK OF QUALITY FOR THE INSTALLATION, COMMISSIONING AND SERVICING OF DOMESTIC HEATING AND HOT WATER SYSTEMS

www.hhic.org.uk
Issue date: 20.08.2020

Index

A
Air outlet grille 28
Application limit 11
Assembly and component 8–9
Automatic air vent 35
B
Basic diagram 6
C
Casing section 28, 35
CE marking 10
Communication cable 32
Condensate discharge 35
Customer service 39
D
Data plate 10
De-icing mode 12
Dimension 21–22
E
Electrical partition 30
Evaporator 35
Expansion relief valve 35
F
Fan 35
Flexible Space Function
  Activated 17
  Deactivated 13
Foundation 26
Functionality 7
H
Heat pump system 7
I
Installation site 23
Installation type 28
Intended use 4
L
Leak-tightness 36
M
Minimum circulation water volume 28
P
Planning the condensate discharge 25
Power supply 30
Pre-installation jig 28–29
Protective zone
  Flexible Space Function 12
Q
Quality of the mains voltage 30
R
Refrigerant 37–38
  Disposal 39
Refrigerant circuit 36
Regulations 6
Remaining feed pressure 34
S
Safety device 6, 12, 45
Scope of delivery 21
Spare parts 35
Swimming pool 29
T
Transport 21
Treating the heating water 32
Type of installation 23
U
UKCA mark 11
W
Warning sticker 10

Supplier
Vaillant Group UK Ltd.
Nottingham Road ▮ Belper ▮ Derbyshire ▮ DE56 1JT ▮ Great Britain
Telephone 0330 100 3143
info@vaillant.co.uk ▮ www.vaillant.co.uk

8000026885_02

Publisher/manufacturer
Vaillant GmbH
Berghauser Str. 40 ▮ 42859 Remscheid ▮ Deutschland
Tel. +49 (0)2191 18 0 ▮ Fax +49 (0)2191 18 2810
info@vaillant.de ▮ www.vaillant.de

© These instructions, or parts thereof, are protected by copyright and may be reproduced or distributed only with the manufacturer's written consent.
Subject to technical modifications.