# Temperature Sensor Kit Installation

This document describes how to install a SolarEdge PT100 temperature sensor and connect it to the residential water heater and to the SolarEdge Smart Energy Hot Water device.

The sensor allows you to measure the water temperature in the water heater. After installing the sensor, you will be able to view the temperature using SolarEdge monitoring platform.

## Package Contents

- PT100 sensor (15 cm long probe)
- Sensor 3-wire cable (3m)
- T Joint pipe fitting with NPT (USA)/ BSP (Europe & APAC) threaded bushing adapters
- Installation guide

Figure 1: Sensor, cable and T-joint fitting (with bushing adapters)

## Installation Guidelines

- Installation of the temperature sensor should be carried out by a certified personnel.
- Connect the sensor to the hot water outlet pipe, at the upper part of the water heater. This way only a small amount of water should be drained so that the water level is below the hot water pipe.
- You can use a third-party 3-wire connection cable, up to 20 meters / 65ft in length.
- Connect the T-joint at the hot water outlet pipe so the PT100 sensor can be directly connected to the tank.
- The original safety temperature and pressure valve is not used for the installation of the temperature.

## Installing the Sensor

*Figure 2.* illustrates the sensor connection.

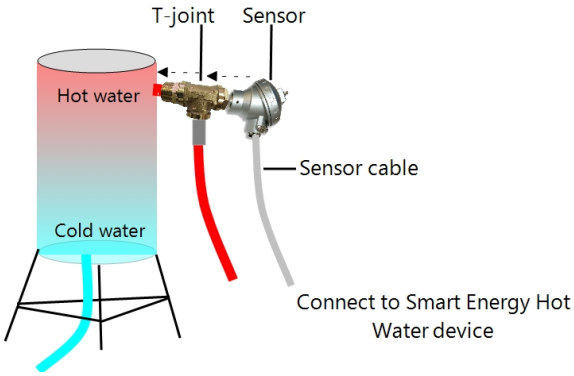


Figure 2: Installing the Sensor

1. Use the pressure valve to drain water from the water tank, until the water level is below the hot water outlet pipe connection. This will ensure that when the outlet hose is removed, water would not spill out.
2. Connect the T-joint fitting to the water tank (See *Figure 3*):
   a. Install the two bushing adapters on the T-joint fitting.
   b. Connect the hot water hose to the T-joint fitting openings (left and central openings) and tighten the adapters.
   c. Connect the T-joint fitting to the water tank using the adapter that includes the external thread.

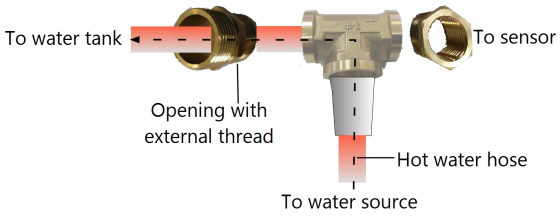


Figure 3: T-joint fitting connection

3. Insert the sensor into the other T-joint fitting opening and tighten by screwing to the T-Joint fitting.
4. Connect the sensor cable to the sensor See *Figure 4*:
   a. Open the sensor lid.
   b. Insert the cable with the fork terminals through the cable opening.
   c. Connect the wires to the terminals: Red wire to red terminal; Blue (or other color) wires to green (or other color) terminals.
   d. Close the lid.

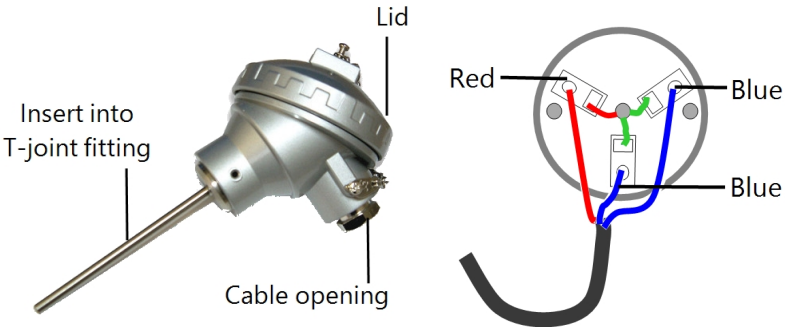


Figure 4: Sensor interfaces

5. Connect the other end of the sensor cable to the Smart Energy Hot Water device (See *Figure 5*):
   a. Turn OFF:
      - The ON/OFF/P switch of the Smart Energy Hot Water device
      - The AC switch on the main distribution panel
   b. Release the four cover screws of the Smart Energy Hot Water device and open the cover.
   c. Insert the sensor cable end through the communication gland located at the bottom of the Smart Energy Hot Water.
   d. Connect the three wires to the left temperature input terminal block (marked J3) Red wire to pin 1 (left-most); two blue wires to pins 2 and 3.

NOTE

When using a third-party 2-wire temperature sensor, connect wires to pins 1 and 2. After that, connect pin 2 and pin 3 with a jumper (not supplied by SolarEdge).

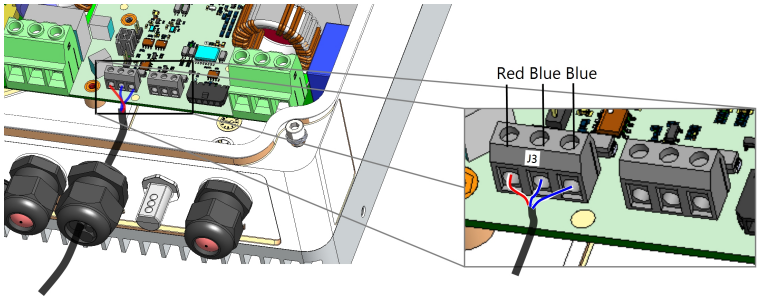


Figure 5: Connecting the sensor cable to the Smart Energy Hot Water device

6. Verify that a jumper socket *is assembled* on **J5** pin header. This will allow usage of the PT100 sensor connected to **J3** connector. Make sure to use the correct pin header matching the connector (*Figure 5*):

- J3 connector - pin header J5
- J6 connector - pin header J4

In case of PT1000 sensor type, remove the jumper socket from the pin holder.

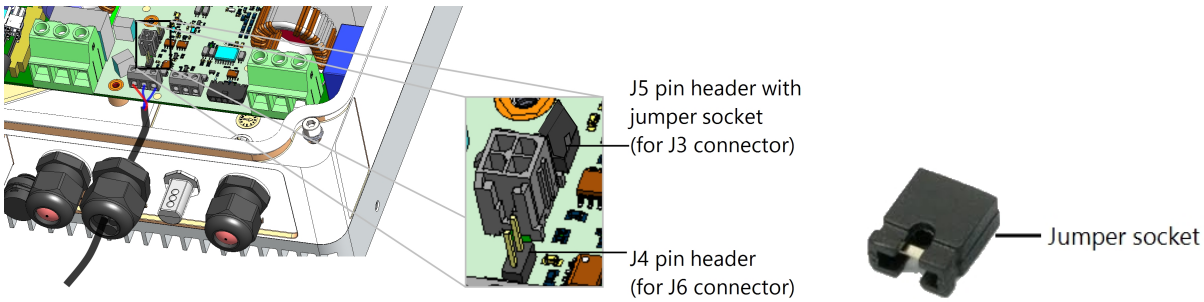


Figure 6: Pin holders (jumper sockets removed)

7. Close the device cover.

# Technical Specifications

| | |
|---|---|
| **Sensor type** | Pt100 (100 Ohms @ 0°C) to IEC 751, Class B, 3/4 wire |
| **Construction** | 6.0mm diameter stem in 316 stainless steel |
| **Termination** | IP67 aluminium alloy weatherproof connection head with 4 wire connection block, M20 x 1.5mm cable entry (gland included) |
| **Process connection** | 1/2" NPT parallel (NA)<br>1/2" BSP parallel (Europe, APAC, Australia) |
| **Probe temperature range** | -148°F to +842°F (connection head @ 338°F) / -100°C to +450°C (connection head @ 170°C) |
| **Probe diameter** | Ø6mm (1/4") |
| **Probe length** | 150mm 1/2"BSPP |
| **Ordering information** | NA: HOTWTR-SENS-NA-S1<br>Europe, APAC, Australia: HOTWTR-SENS-RW-S1 |