Eleven



North Sea Hybrid Inverters

EL3000, EL3600, EL4000, EL5000, EL6000

Installation Manual

Ver. 1.2 Feb 2026

Optimised for Sodium-Ion Batteries

Eleven Energy's North Sea Hybrid Inverters are purpose-built to maximise the performance and lifespan of sodium-ion battery systems. Combining cutting-edge technology, intelligent functionality, and installer-friendly design, this inverter is a robust, future-ready solution for sustainable home energy management.

This manual provides detailed information about the hybrid inverters, including installation guidelines, electrical connections, configuration and commissioning procedures and technical specifications.

Before installing and operating the product, please read this manual carefully to ensure you are familiar with the safety instructions, features, and functions of the inverter.

Check Out Our Installation Guide Video



elevenenergy.co.uk/product-documents

Box Content

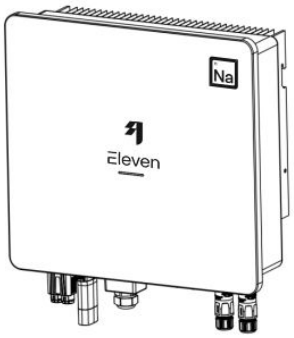

Inverter
Qty: 1



Mounting Bracket
Qty: 1



WIFI/ Bluetooth Data Dongle
Qty: 1

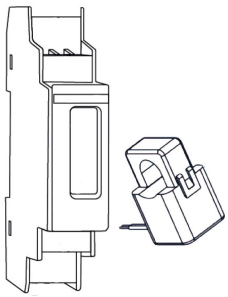

ADL200n-CT Digital Meter with CT Clamp
Qty: 1

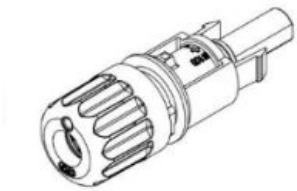

PV Positive Input Terminal
Qty: 2



PV Input Terminal crimp contacts
Qty: 4

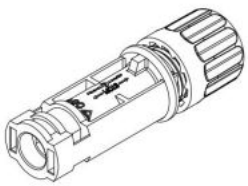

PV Negative Input Terminal
Qty: 2

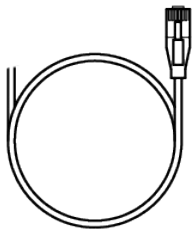

Inverter-meter Communication Cable
Qty: 1

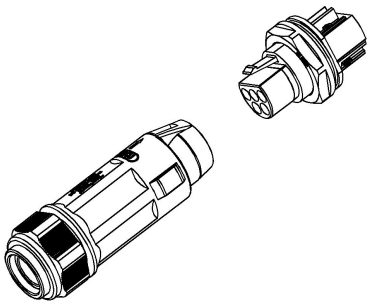

AC Terminal Connector
Qty: 2



Battery Terminal Enclosure
Qty: 1

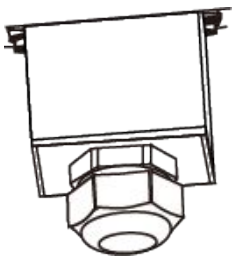

Communication Interface housing
Qty: 1

If any damaged or missing parts are found, please contact us immediately.

Connections

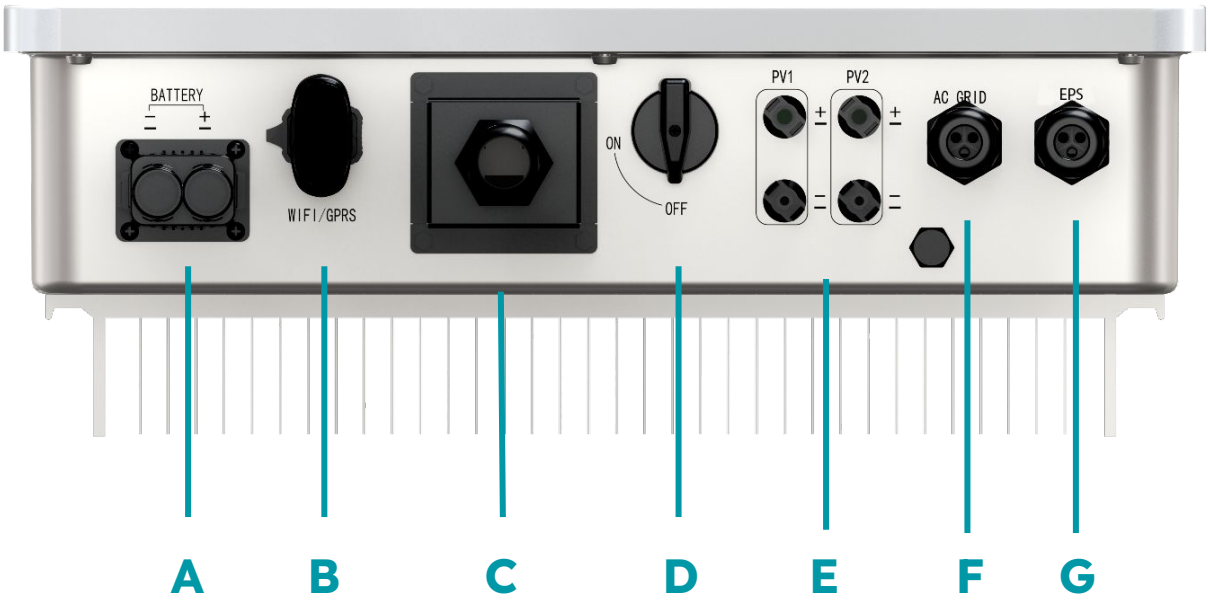

A	Battery Connection Port
B	Data Dongle Connection Port
C	Communication Module Interface
D	PV Isolator (Standard: EN 60497-3)
E	PV Input Terminals
F	AC Supply Terminal for Grid Connection
G	EPS Terminal

Safety and Precautions

This document is intended exclusively for professional electricians accredited for the installation of battery storage systems and thoroughly familiar with UK electrical standards and regulations. **All electrical installations must be carried out by a qualified and UK registered electrician and in accordance with the IET Wiring Regulations (BS 7671 - 18th Edition).**



- The inverter must be installed in **a well-ventilated area** to ensure optimal performance. Avoid direct sunlight or near water sources.
- Ensure the mounting wall is fire-resistant and sturdy enough to support the inverter's weight, with **a minimum thickness of 100 mm**.
- Install the inverter vertically with all connections positioned at the bottom. Do not install the inverter horizontally or at an angle.
- Mount the inverter at least 3 feet (approximately 1 metre) above ground level.
- For external installations, the inverter must be mounted under a **protective canopy**.
- Only Eleven Energy sodium batteries are compatible with this inverter.
- During operation, the heat sink may become hot. Do not touch the heat sink of the inverter when in operation.
- If you suspect any issues with the inverter, please contact us.

Wall Mounting

1. Place wall mounting bracket horizontally onto the wall and mark the position of the bracket holes.

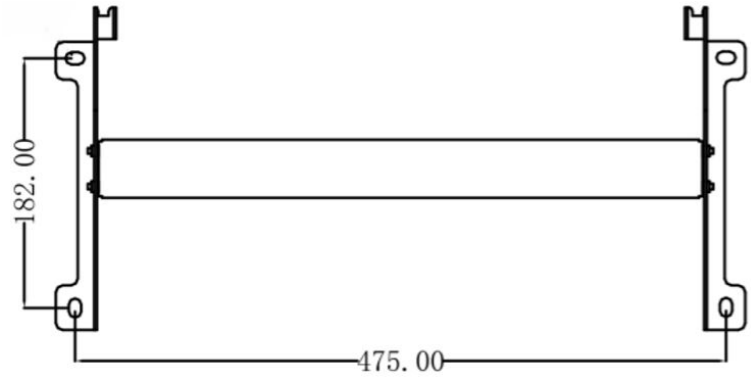

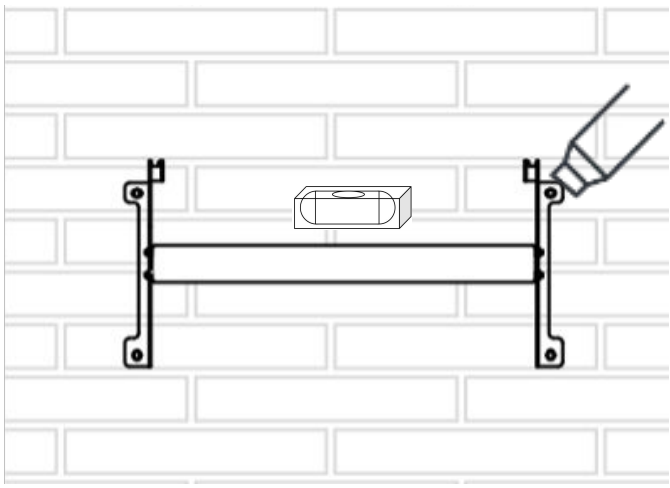

2. Drill 4 holes at the marked positions, at least 75 mm deep. Fix the mounting bracket to the wall using **4 x M8*80** expansion bolts.

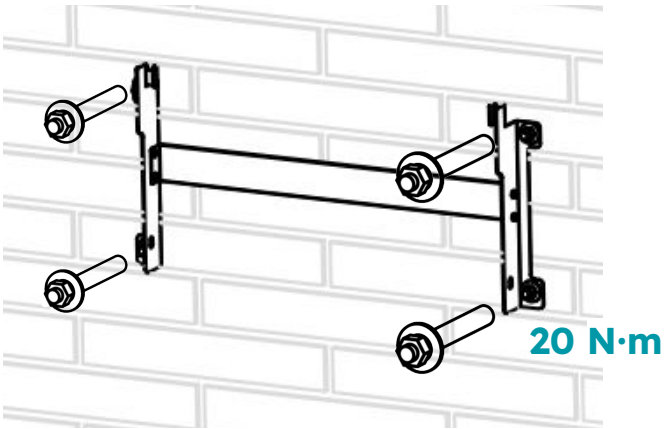

Different fixings should be used if fitting the inverter to a non-masonry wall.

3. Mount the inverter onto the mounting bracket. Insert the 2 x M6 safety locking screws on the left and right side

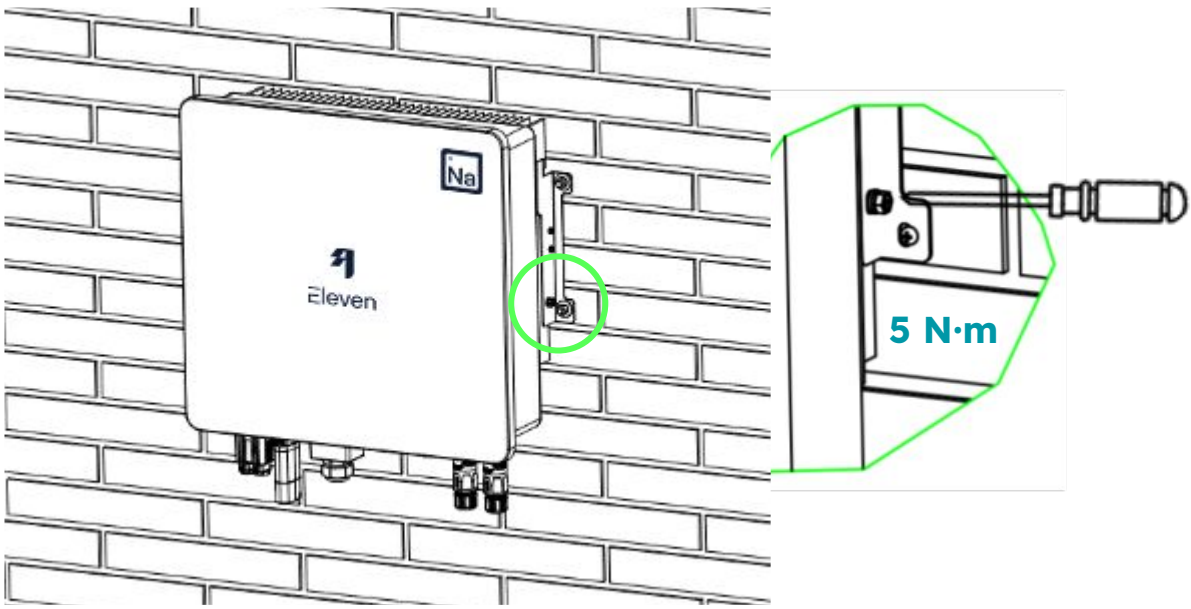

Ensure there is sufficient clearance around the inverter to allow for proper heat dissipation. Refer to the diagram below for the recommended spacing around the inverter.

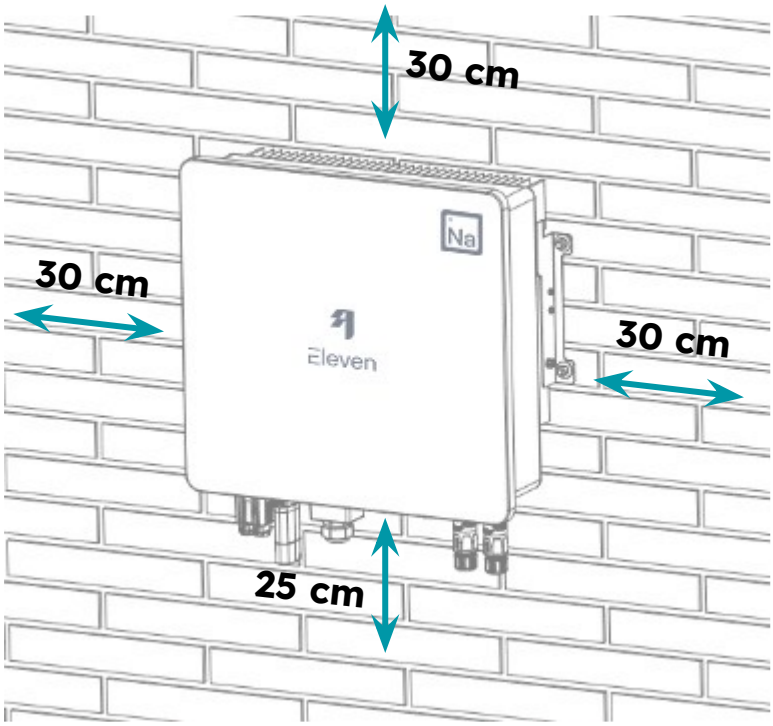

PE Connection

Non-current-carrying metal parts of the PV-battery system must be properly grounded.

1. Use a yellow-green outdoor grounding cable with a cross-sectional area of at least 6 mm².
2. Attach the OT terminal using an M6 hex screw, ensuring a tightening torque of **5 N·m**.

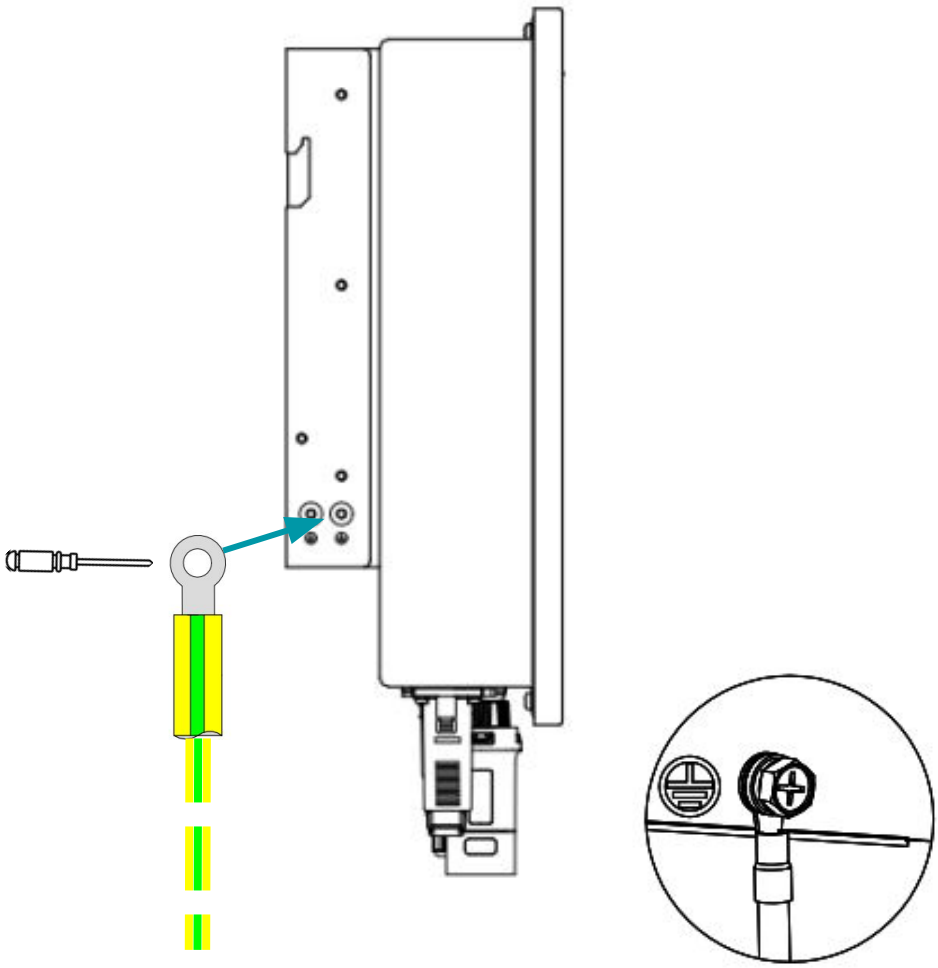

Connect to **Main Earthing Terminal**

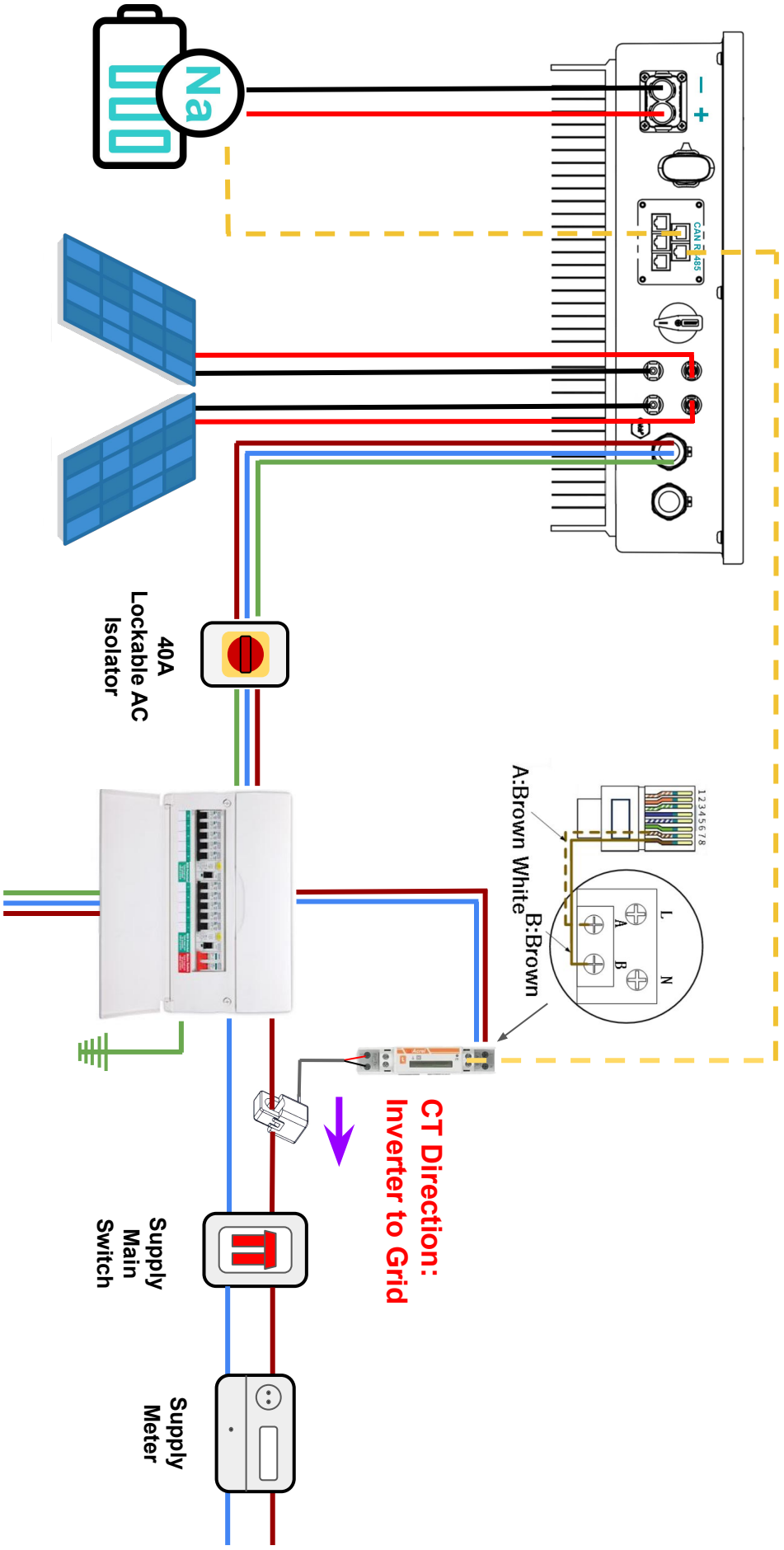
Na
CAN RS485
40A
Lockable AC
Isolator
A:Brown White
B:Brown
L
N
CT Direction:
Inverter to Grid
Supply
Main
Switch
Supply
Meter

Digital Meter & CT Clamp

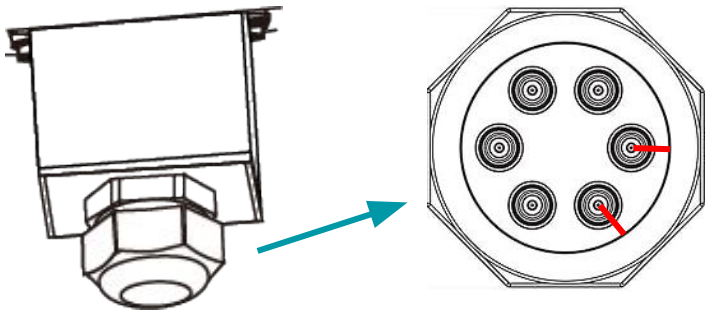

Make incisions on the rubber seal to slide in the data cables

Inverter Communication Module Interface
RS485 Port

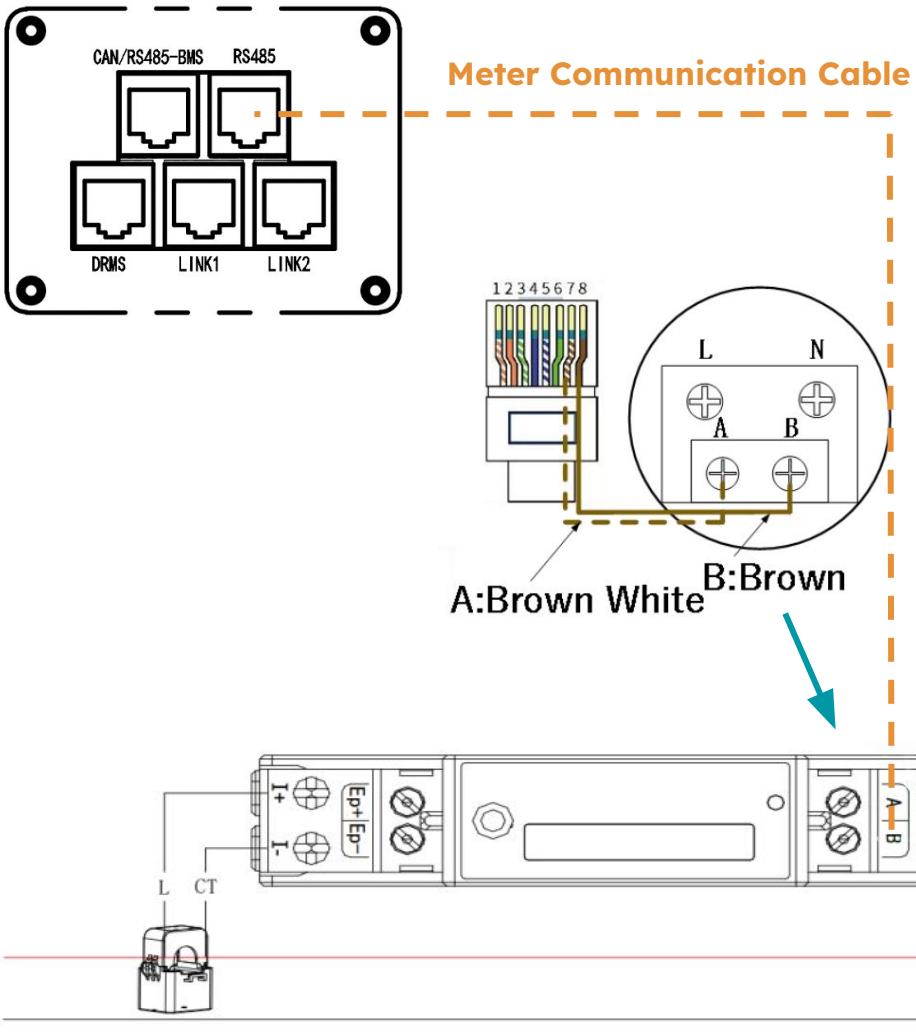

The CT clamp connected to the digital meter must be installed around the live incoming supply to the property to monitor the total consumption of the building. Ensure the arrow on the clamp points to the grid.

AC cable size requirements: 6 ~ 10 mm^2

The recommended maximum cable length should not exceed 50 metres, as excessive cable resistance can lead to power loss and reduce the inverter's efficiency.

1

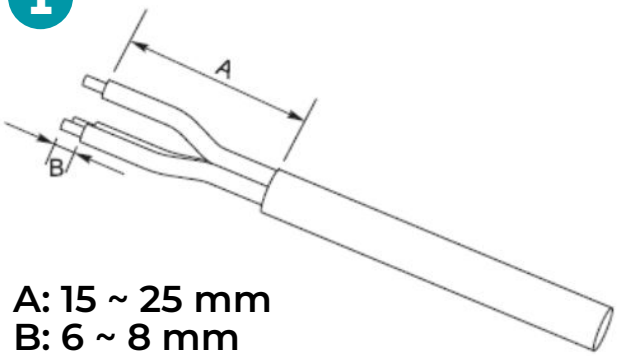

A: 15 ~ 25 mm
B: 6 ~ 8 mm

2

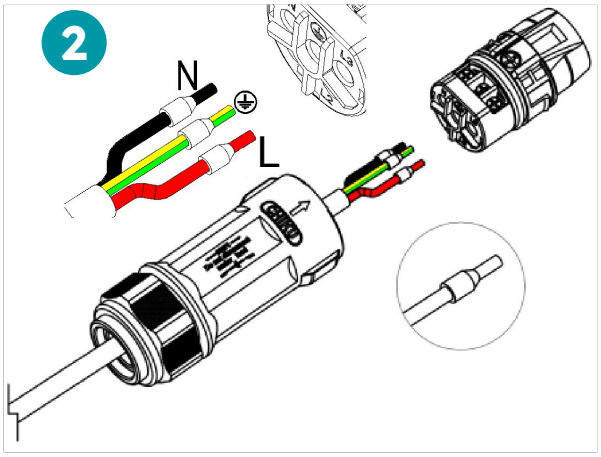

3

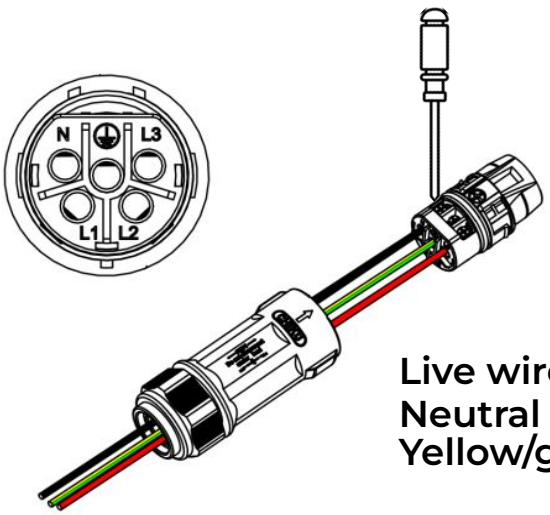

Live wire: L
Neutral wire: N
Yellow/green wire: PE

4

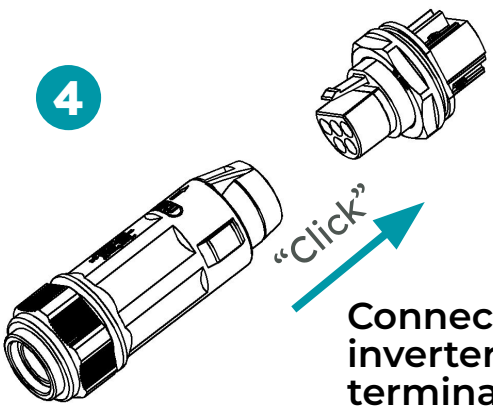

Connect to the inverter AC terminals

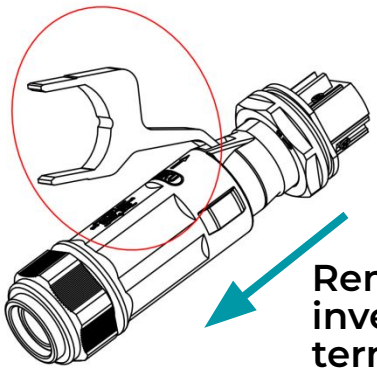

Remove from inverter AC terminals

Ensure the PV Switch is on the “OFF” position before connecting PV strings to the inverter.

Ensure that the maximum short-circuit current and maximum input voltage of each PV module remain within the allowable range specified for the inverter.

Verify that the positive pole of the PV string is correctly connected to the PV+ terminal of the inverter, and the negative pole of the PV string is connected to the PV- terminal of the inverter. Alway double check with a multimeter before connection.

DC cable size requirements: 4 ~ 6 mm^2

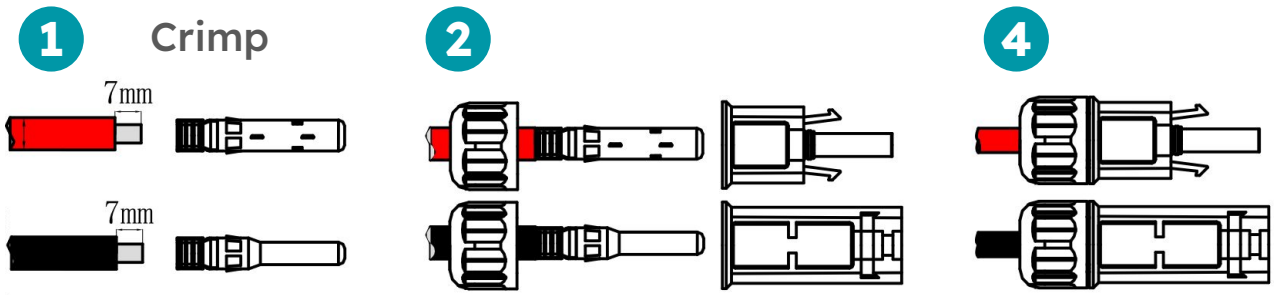

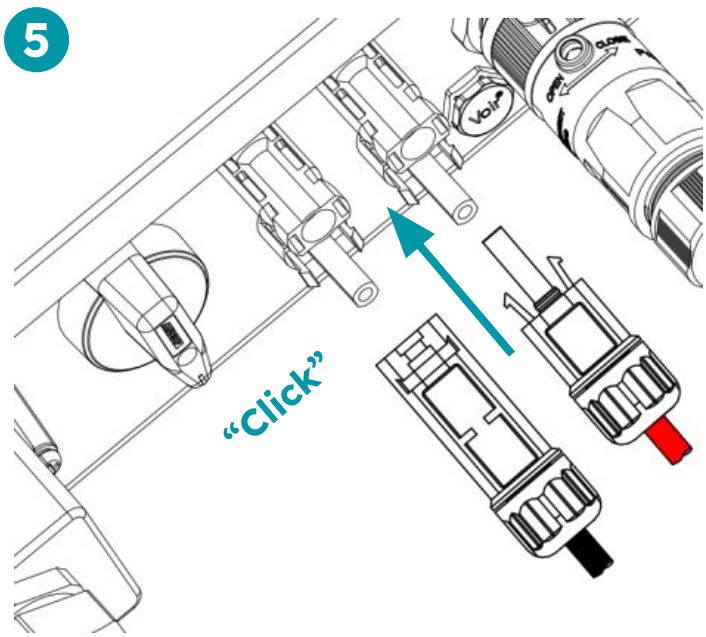

Battery Connection

Before connecting the battery cable, ensure that both the inverter and battery are powered off.

Do not connect or disconnect the battery cable while the inverter is operating, as this could result in electric shock and damage both the inverter and battery.

Avoid connecting the same battery pack to multiple inverters, as this would cause damage to the inverter.

Only use the provided inverter-to-battery power and data cables.

1

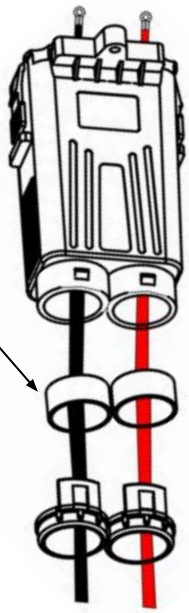

2

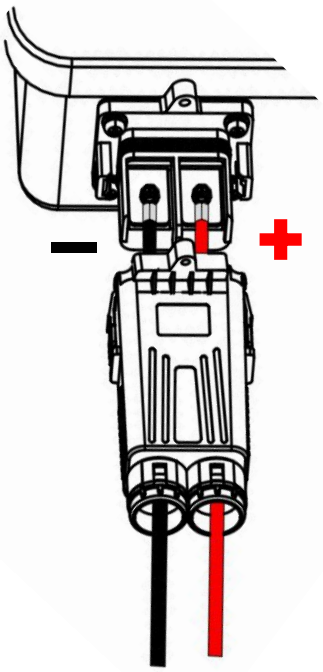

Secure the positive and negative power cables into their corresponding terminals, ensuring a locking torque of **3.5 N·m**.

Do not reverse polarity!

3

CAN BUS Cable

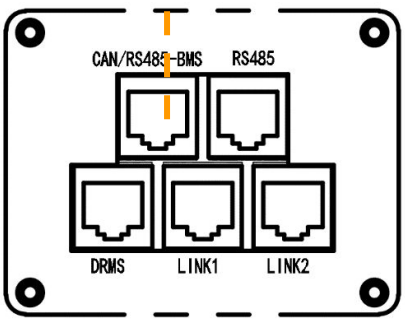

Inverter Communication Module Interface
CAN/RS485-BMS Port

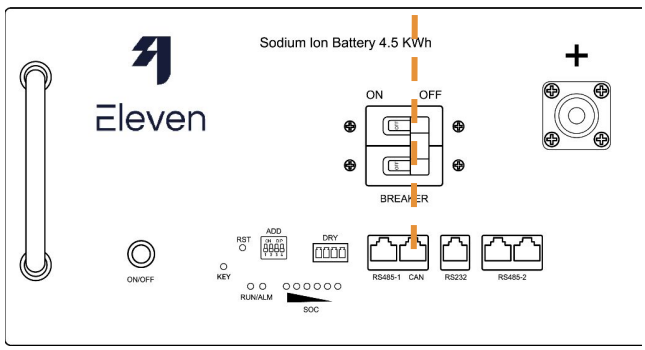

Sodium Battery Pack
CAN Port

WiFi & Bluetooth Data Dongle

1



Connect to the inverter Data Dongle Port

2



Tighten the connector

Indicator Light Description

RUN	A flashing light every second indicates normal operation
COM	The COM light indicates that the equipment data can be collected. It remains on continuously but briefly turns off when data is being sent. It turns back on after receiving and verifying that the data
NET	Network Status Indicator • **Flashing quickly:** The inverter is scanning for a WiFi network. • **Flashing slowly:** The cloud platform has been registered successfully. • **Always on:** The inverter is connected to a WiFi network.

All three lights flashing simultaneously indicate that the dongle is currently upgrading.

EPS Connection

The Emergency Power Supply (EPS) port becomes live when the inverter is turned on and can deliver a maximum output power of 6000 W during a grid failure. To ensure safety, this output must be protected as close to the inverter as possible using a double-pole 30 mA RCD rated for up to 30 A.

If the load exceeds 6000 W, the inverter will cease output and enter a fault state. The EPS output will only function when sufficient battery capacity is available.

An earth rod must be installed and connected to the main earthing terminal, positioned as close to the supply origin as possible. Adequate overload and short-circuit protection must also be installed in compliance with IEE Wiring Regulations.

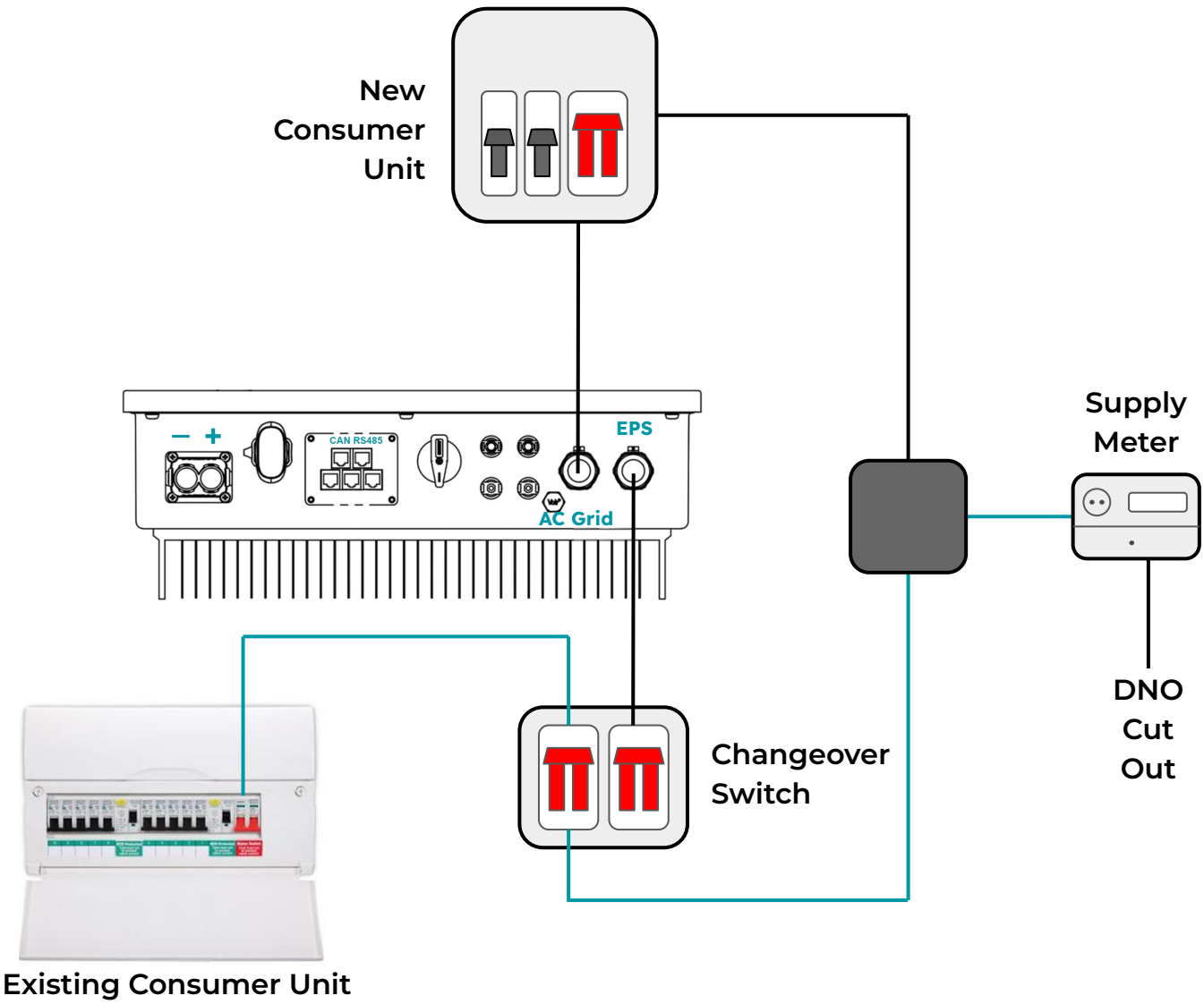

Startup Procedure

1. Turn on the grid-side AC isolator
2. Turn on the PV Switch on the inverter
3. Press the ON/OFF switch on the battery pack(s).
4. Set the battery's integrated circuit breaker to the ON position.
5. The inverter will start automatically after completing its self-test procedure.
6. Turn on the EPS AC isolator if EPS is connected.
7. Wait for 30 seconds for the inverter to turn on.

Shutdown Procedure

1. In Site & System Settings in the app, power off the inverter
2. Turn off the PV Switch on the inverter
3. Turn off the EPS AC isolator
4. Turn off the grid-side AC isolator
5. Wait until the LED light on the inverter turns off completely.
6. Turn the battery's integrated circuit breaker to the OFF position, then press the battery ON/OFF switch.

Inverter Front Panel Indicator Light Description

	Flashing: Booting up / Standby mode Always on: Grid connected
	Flashing: Off-grid and standby mode Always on: Off-grid mode
	Flashing every 500 ms: Non-functional, waiting for recovery conditions to be met Flashing every 2 Sec: Reduced power mode Always on: Non-recoverable fault

Before Commissioning

1. Download the Eleven Energy app and obtain an installer account
2. Ensure all connections to grid, PV and battery are made
3. Obtain the WiFi network and password
4. Ensure the phone running the app remains close to the inverter and has Internet coverage during the entire commissioning process
5. The system is powered down during commissioning, ensure EPS loads are bypassed

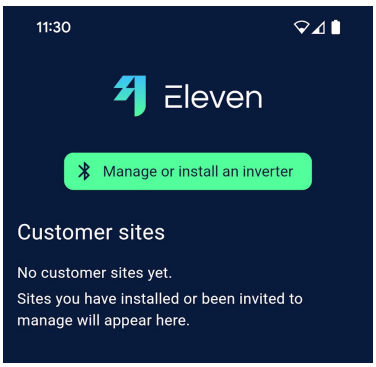

1. From the installer menu, press “Manage or install an inverter”

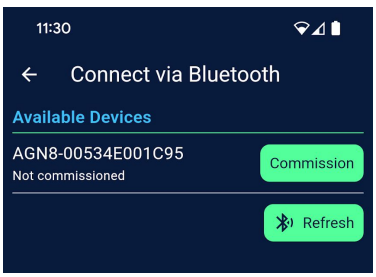

2. After scanning is complete, select “Commission”

   If the inverter says “Connect” the inverter has already been commissioned

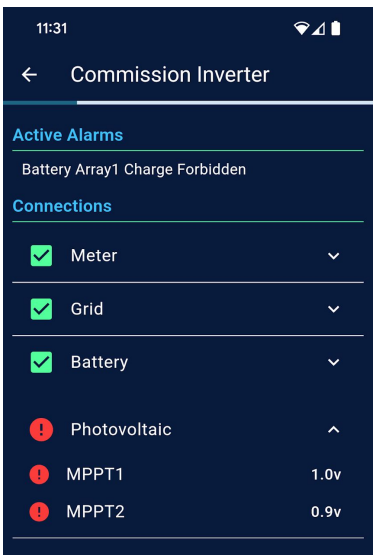

3. The status of all connections will be shown, any connection issues will be shown in red. Expand any sections to see more detail on each connection and correct as necessary

   Check that the Grid connection shows positive power, if negative power is shown, check the CT clamp direction points towards the incoming supply

4. When ready, press Next

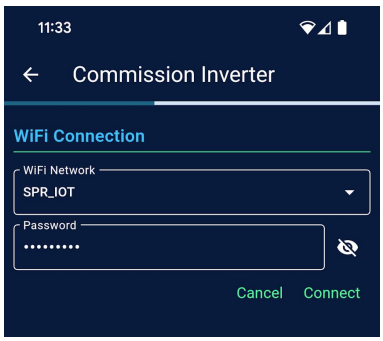

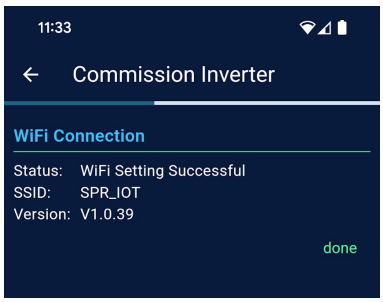

5. Select the WiFi Network to connect to and enter the WiFi password then press “connect”
6. Check that the WiFI connection is successful or check the password is the connection is unsuccessful
7. When the connection has been confirmed, press Next

   If no Internet connection is available at the premises yet this step can be skipped however the inverter will not report data to the app and cannot be controlled by the app



8. Fill in all information in the Site Details page, providing a name for the site and postcode
9. Ensure you specify the correct export power limit according to the approval from the District Network Operator
10. In the Battery Storage section specify the number of separate battery modules installed
11. In the Photovoltaic section, specify the number of strings and for each string, the rating of panel and number of panels installed
12. After checking the supplied details, press Next

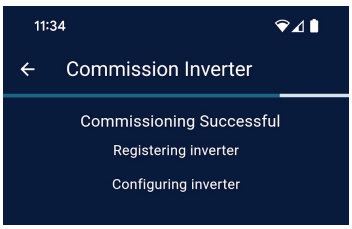

13. The inverter commissioning will begin and the inverter registered Check the process completes successfully
14. When ready, press Next

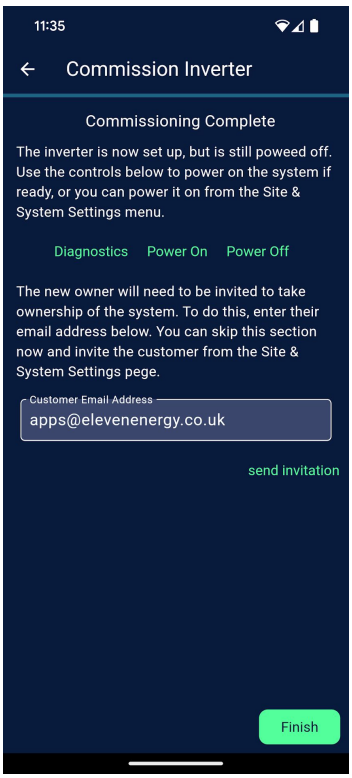

15. The inverter will be left in a powered off state, if you are ready to power on the inverter press the **Power On** button. Alternatively you can power the inverter on and off in the Site & System Settings menu later
16. If known, provide an email address for the system owner, they will then receive an invitation to take ownership of the system with a code allowing them to sign up. If preferred, this step can be skipped and the new owner invited from the Site & System Settings menu
17. When ready, press the Finish button

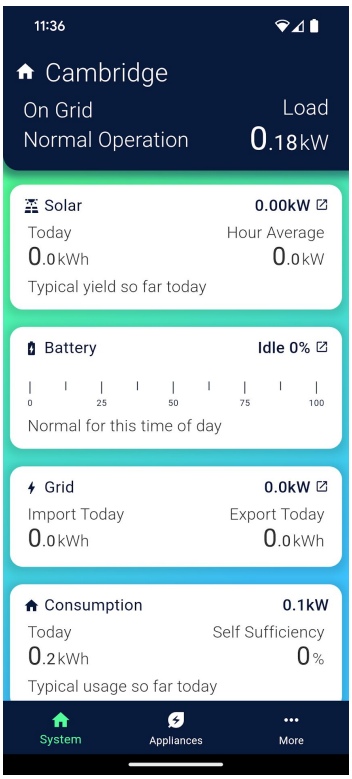

18. You will be transferred to the site control page, use the menu at the bottom to navigate to the Site & System Settings menu and on to the Diagnostics page if required

Eleven



Elevenenergy.co.uk