K TYPE Extended Ball Valve

HPBV11, HPBV114, HPBV114X2, HPBV28 & HPBV35

Installation and Maintenance Instructions

Intatec Ltd
Airfield Industrial Estate
Hixon
Staffordshire
ST18 0PF

Tel: **01889 272 180**
Fax: **01889 272 181**
email: **sales@intatec.co.uk**
web: **www.intatec.co.uk**

In this procedure document we have endeavoured to make the information as accurate as possible.
We cannot accept any responsibility should it be found that in any respect the information is inaccurate or incomplete or becomes so as a result of further developments or otherwise.

© Intatec Ltd 2025

inta

Introduction

Inta supply a wide range of components for heat pump systems including heat pump ball valves.

The Inta KTYPE extended external ball valve provides easy connections between the heat pump, flexible hose, antifreeze valve (if fitted) and the heating system.

The extended stem allows the insulation to be sealed, which will not be broken when operating the valve.

Solid brass construction.

Rotation of stem limited to 90˚ (open to closed)

Supplied individually to suit the flow or return of the heat pump system.

It is recommended that a valve is installed on both flow and return pipework.

KTYPE extended external ball valve are supplied with an adjustment key and dust cap.

These instructions cover the installation, operation and maintenance. Please read the enclosed instructions before commencing the installation of this product, please note;

We recommend that the installation of any Inta product is carried out by an approved installer.

It is recommended that an in line strainer or magnetic filter, like the Intaklean HP, is fitted to sprotect system components.

Products

1" female swivel x 1" male flat face extended key type ball valve	HPBV11
1¼" female swivel x 1" male flat face extended key type ball valve	HPBV114
1¼" female swivel x 1¼" male flat face extended key type ball valve	HPBV1114x2
1" female swivel x 28mm compression extended key type ball valve	HPBV25
1¼"female swivel x 35mm compression extended key type ball valve	HPBV35

Technical Specification

Max. inlet pressure - static:		25 bar
Working temperature range:		-10 to 90˚C
Temperature range:		-20 to 120˚C
Threaded connections:		BS EN ISO 228
Kv value:	HPBV11 & HPBV28	66 m^3/hr
	HPBV114	66 m^3/hr
	HPBV114X2 & HPBV35	80 m^3/hr

© Intatec Ltd 2025

Dimensions

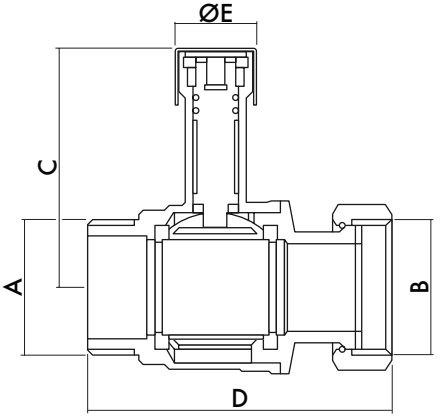

Code	A	B	C	D	ØE
HPBV11	G1	G1	63.8	77.5	23
HPBV114	G1	G1¼	63.8	77.5	23
HPBV114X2	G1¼	G1¼	72.3	95.5	23

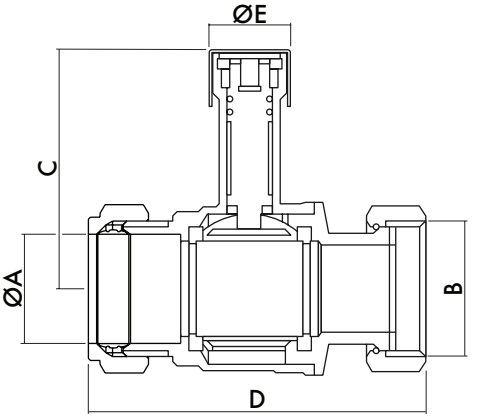

Code	ØA	B	C	D	ØE
HPBV28	28	G1	64	83	23
HPBV35	35	G1¼	68.8	101.6	23

© Intatec Ltd 2025

Preparation for installation

Flush the water supply pipes thoroughly prior to installation. Do not allow debris, PTFE tape or any metal particles to enter the system.

Important: All plumbing is to be installed in accordance with applicable codes and regulations.

Important: When fitting/installing a heat pump system or components it is essential that the correct insulation is used and properly sealed to reduce heat loss from the system, maintaining the system efficiency.

Installation

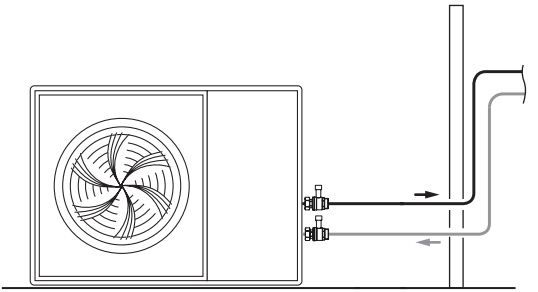

The HPBV heat pump ball valves are designed to connect directly onto the heat pump and to allow the flexible hose or anti-freeze valve to connect directly onto the valve.

The heat pump ball valves can be installed in other locations on the system if the connections are suitable.

The heat pump valves can be installed directly onto the heat pump and installed outdoors.

The heat pump valves should be properly insulated and sealed to reduce heat loss and only the dust cap should be exposed to allow the valves to be operated.

Ensure a sealing washer (provided) is used when making the swivel joint and when connecting the flexible hose or anti-freeze valve (not provided with the valve).

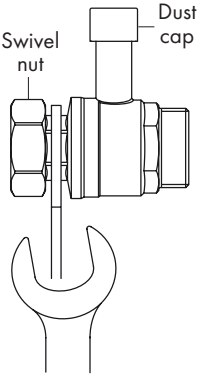

Hand tighten the valve onto the heat pump and position in the desired orientation.

Use a suitably sized spanner on the hexagonal section as shown to hold the valve in position.

Use a suitably sized spanner or adjustable wrench on the swivel nut to tighten the joint, do not over tight.

When connecting the flexible hose or anti-freeze valve a similar procedure should be followed, hold the valve secure using a spanner on the hexagonal section when tightening the connection.

The valve and pipework should be fully insulated to create a water tight seal.

© Intatec Ltd 2025

Operation

Ball valves have a quarter turn operation, clockwise to close, providing quick and positive isolation.

Remove the dust cover from the top of the stem exposing the hexagonal section at the top of the stem.

Insert the adjustment tool into the hexagonal section and rotate clockwise to close or anticlockwise to open.

The adjustment tool will be in-line with the valve in the open position.

When the adjustment tool is removed the position open can be determined by the slot in the stem being in-line with the slot in the body as shown - the open position.

Caution: Rapid closure of quarter turn ball valves on liquid service may cause water hammer and shock in the system.

The valve should only be used in the fully open or closed positions and should not be used to regulate the flow.

When operating is completed refit the dust cover to protect the top of the stem.

The adjustment tool is manufactured from a heat insulating polymer but on hot application it is recommended that suitable hand protection should be worn.

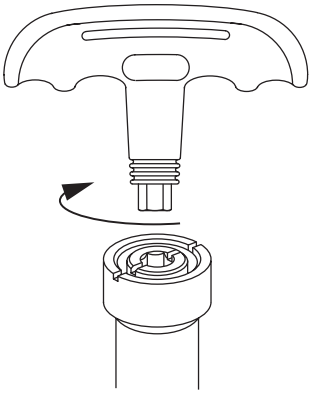

Insulation

Insulating and sealing the external pipework and external fittings is of paramount importance, not only for the efficiency of the heat pump and the system but also to protect the external fittings from the elements.

This is why Inta has partnered with Primary Pro, insulation experts.

Inta use their insulation to protect their valves and keep you system running as efficiently as possible.

For more infromation on how to correctly install and seal your insulation, please scan the QR code for the Primary Pro YouTube channel:

© Intatec Ltd 2025

Notes:

© Intatec Ltd 2025

Notes:

© Intatec Ltd 2025

Please leave this Manual for the User

To activate your product warranty please visit

www.intatec.co.uk

and click on Product Registration

Intatec Ltd
Airfield Industrial Estate
Hixon
Staffordshire
ST18 0PF

Tel: **01889 272 180**
Fax: **01889 272 181**
email: **sales@intatec.co.uk**
web: **www.intatec.co.uk**

E & O.E

© Intatec Ltd 2025

30-04-25