Eleven

Galvani Sodium Battery

ELB-4.5-02

Installation Manual

Ver. 1.1 Oct 2026

A Sustainable, Reliable, and Scalable Energy Storage Solution

Eleven Energy Galvani Sodium Battery combines innovative sodium-ion technology with sustainable design, offering reliable energy storage that's eco-friendly, durable and adaptable to your needs.

This manual provides detailed information about the battery system, including installation guidelines, electrical connections, configuration and technical specifications.

Before installing and operating the product, please read this manual carefully to ensure you are familiar with the safety instructions, features, and functions of the battery system.

Check Out Our Installation Guide Video

elevenenergy.co.uk/product-documents

Accessory Box Contents

Junction Box
640 x 220 x 250 mm
Qty: 1

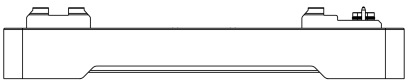

Battery Base
640 x 80 x 250 mm
Qty: 1

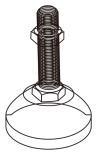

Adjustable Foot
M12
Qty: 4

Inverter-Battery Power Cable Set
Pre-installed
35 mm^2; 2 m
Qty: 1 set

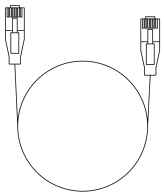

Data Cable
2 m
Qty: 1

Grounding Cable
12 AWG; 2 m
Qty: 1

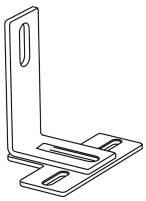

Wall Mount Bracket
Qty: 4 Sets

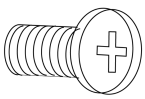

M5 Flat Head Screw
12 mm
Qty: 12

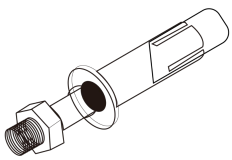

M6 Expansion Bolt
80 mm
Qty: 4

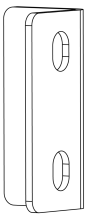

Battery Interlink Bracket
Qty: 2

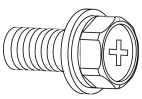

M5 Hex Screw
16 mm
Qty: 4

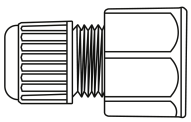

Waterproof Gland
For Data Cable Terminal
Qty: 3

Battery Box Contents

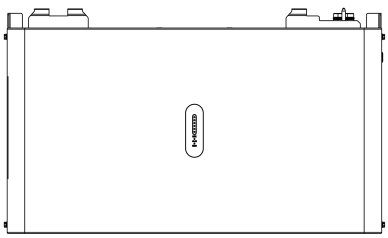

Battery Pack
640 x 350 x 250 mm
Qty: 1

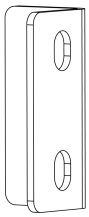

Battery Interlink Bracket
Qty: 2

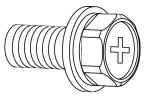

M5 Hex Screws
16 mm
Qty: 4

If any damaged or missing parts are found, please contact Eleven Energy immediately.

Dimensions

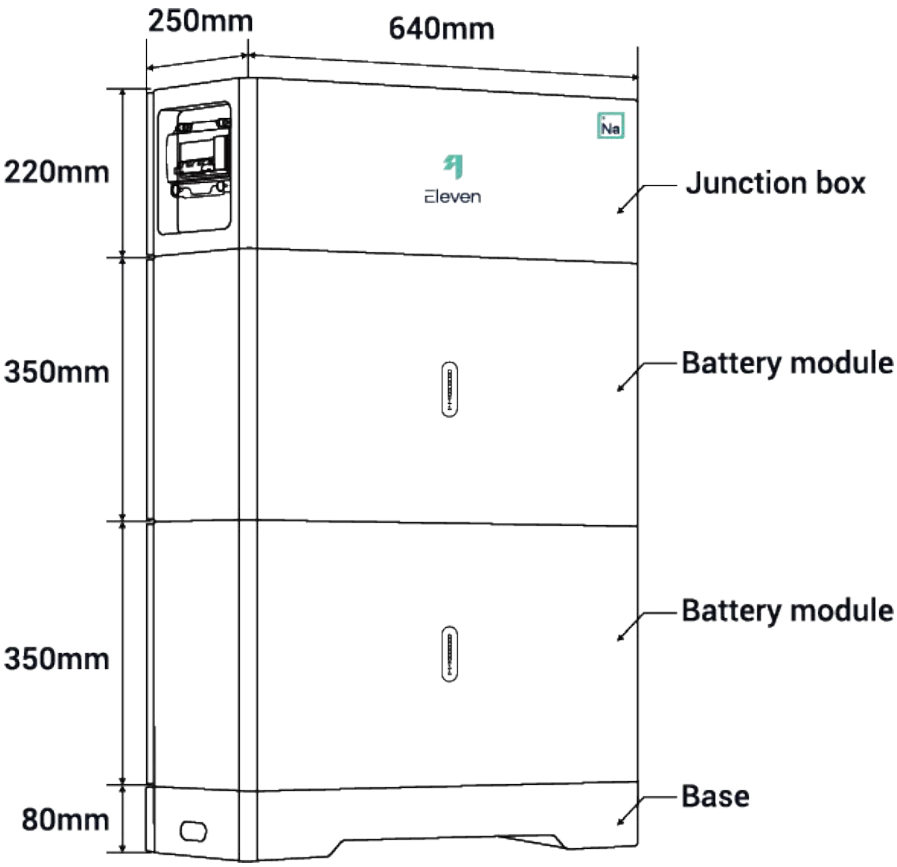

Interface

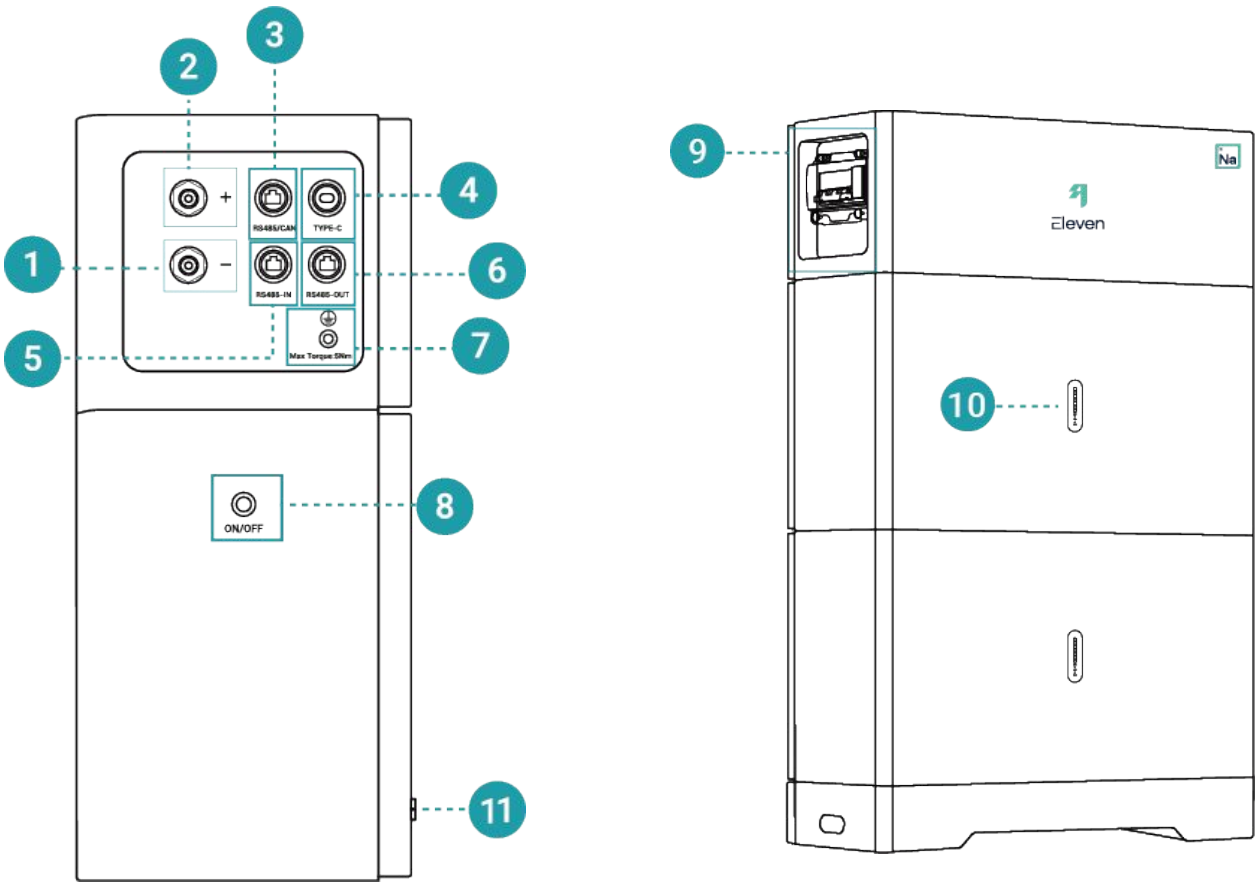

1	– Battery Negative Terminal
2	+ Battery Positive Terminal
3	Inverter-Battery Communication Port
4	USB Type-C Battery Diagnosis Port
5	RS485-IN: Battery Stack Parallel Connection Port
6	RS485-OUT: Battery Stack Parallel Connection Port
7	GND: Battery Grounding Connection Point
8	Battery Module ON/OFF Switch Button
9	Integrated Battery Circuit Breaker
10	Battery Status Indicator Lights
11	Battery Module Pressure Relief Valve

Safety and Precautions

This document is intended exclusively for professional electricians accredited for the installation of battery storage systems and thoroughly familiar with UK electrical standards and regulations. **All electrical installations must be carried out by a qualified and UK registered electrician and in accordance with the IEE Wiring Regulations (BS 7671 - 18th Edition).**

- The battery is designed to work with Eleven Energy Hybrid Inverters. Do not connect this battery pack to any other brands of inverters or battery packs.
- An earth bond must be installed between the battery and the inverter.
- Do not connect the battery packs in series.
- Avoid installing the battery pack near water or fire sources.
- Ensure the mounting wall is fire-resistant and sturdy enough with **a minimum thickness of 100 mm**.
- Do not use the battery if there are any deformities, such as bulging or leakages
- Do not disassemble, puncture or throw the battery pack.
- Do not attempt to repair the battery pack.
- In the event of a fire, only dry powder fire extinguishers can be used.
- Do not store or install the battery pack upside down or sideways.

1. Install Adjustable Feet

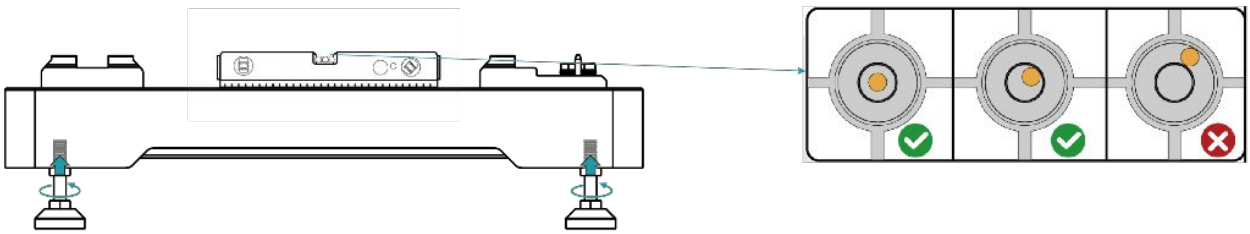

2. Install expansion bolts for wall mounting bracket

Note: Only four drill holes are required per stack—two for the top battery module and two for the base.

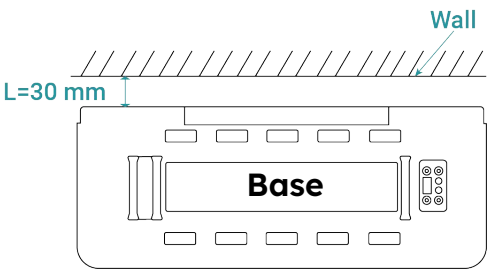

Drill Template

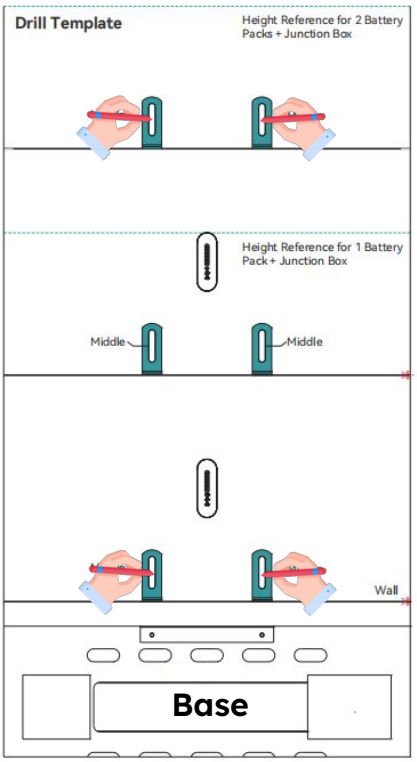

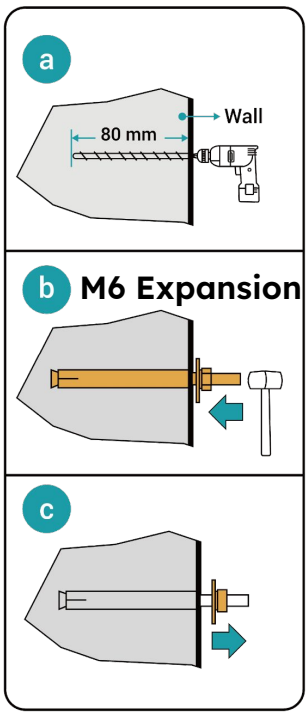

1. Assemble Battery Models and Junction Box

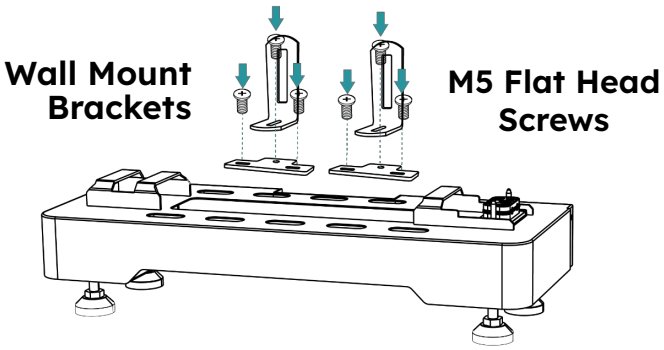

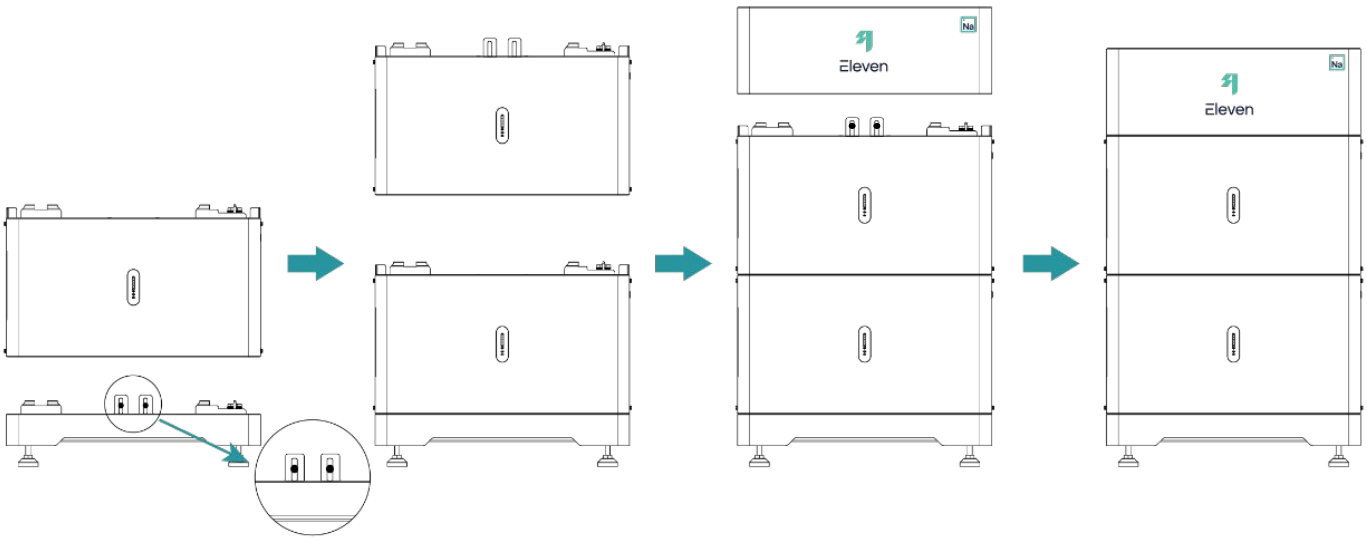

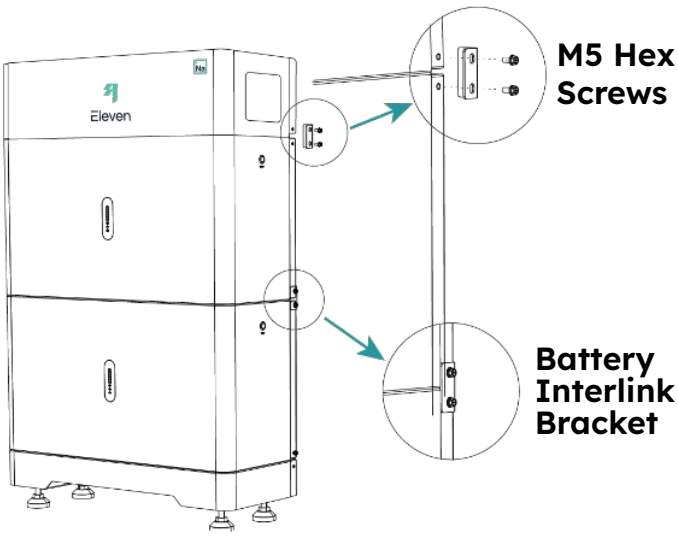

Do not stack more than **four battery modules** in a single stack.

⚡ **WARNING – ELECTRIC SHOCK HAZARD**

Before connecting the battery packs, verify that both the inverter and the battery modules are switched OFF and that all indicator LEDs are OFF.

Do not connect or disconnect battery cables while the inverter is operating or energised, as this may result in electric shock and damage to the inverter and battery modules.

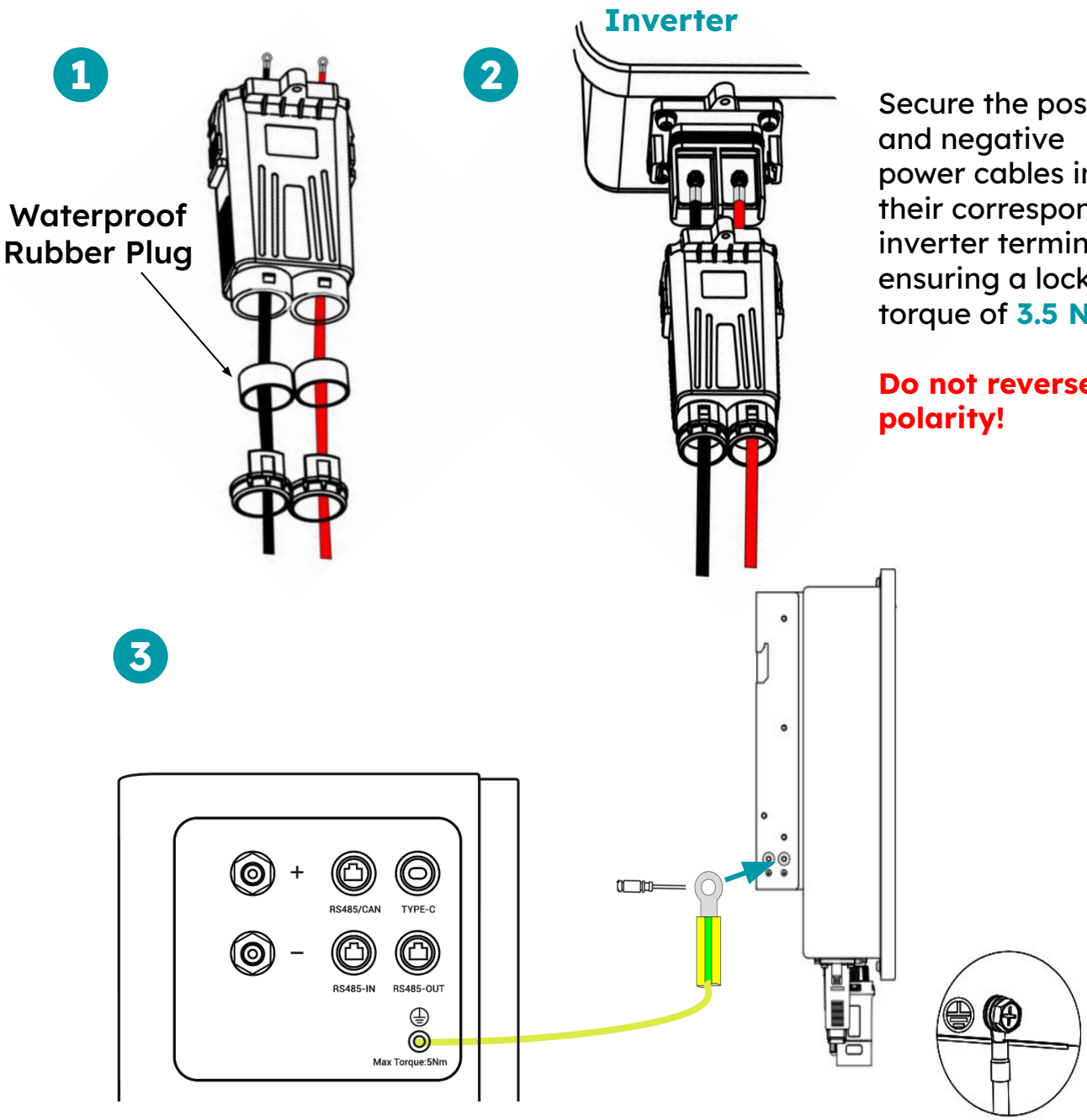

Secure the positive and negative power cables into their corresponding inverter terminals, ensuring a locking torque of **3.5 N·m**.

Do not reverse polarity!

Grounding Cable to be connected to inverter grounding point

4

Inverter Communication Module Interface
RS485 / CAN Port

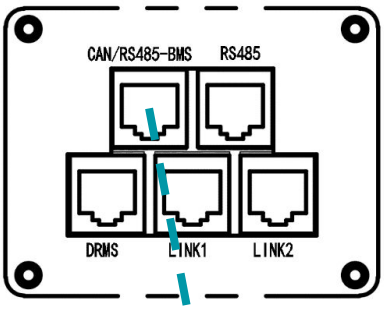

Data Cable

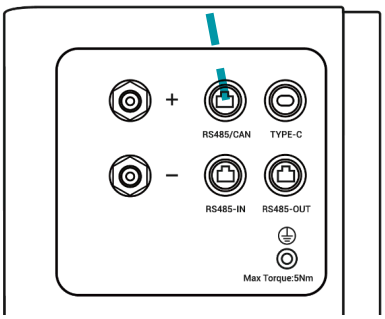

Battery Junction Box Communication Interface
RS485 / CAN Port

Data Cable Terminal Waterproof Gland

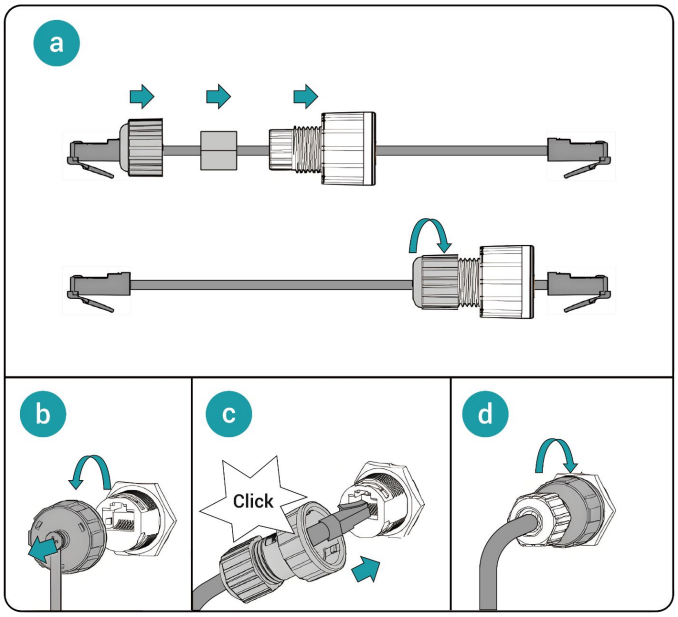

Any unused ports must have the caps screwed on and tightened

5 Multi-stack Connection

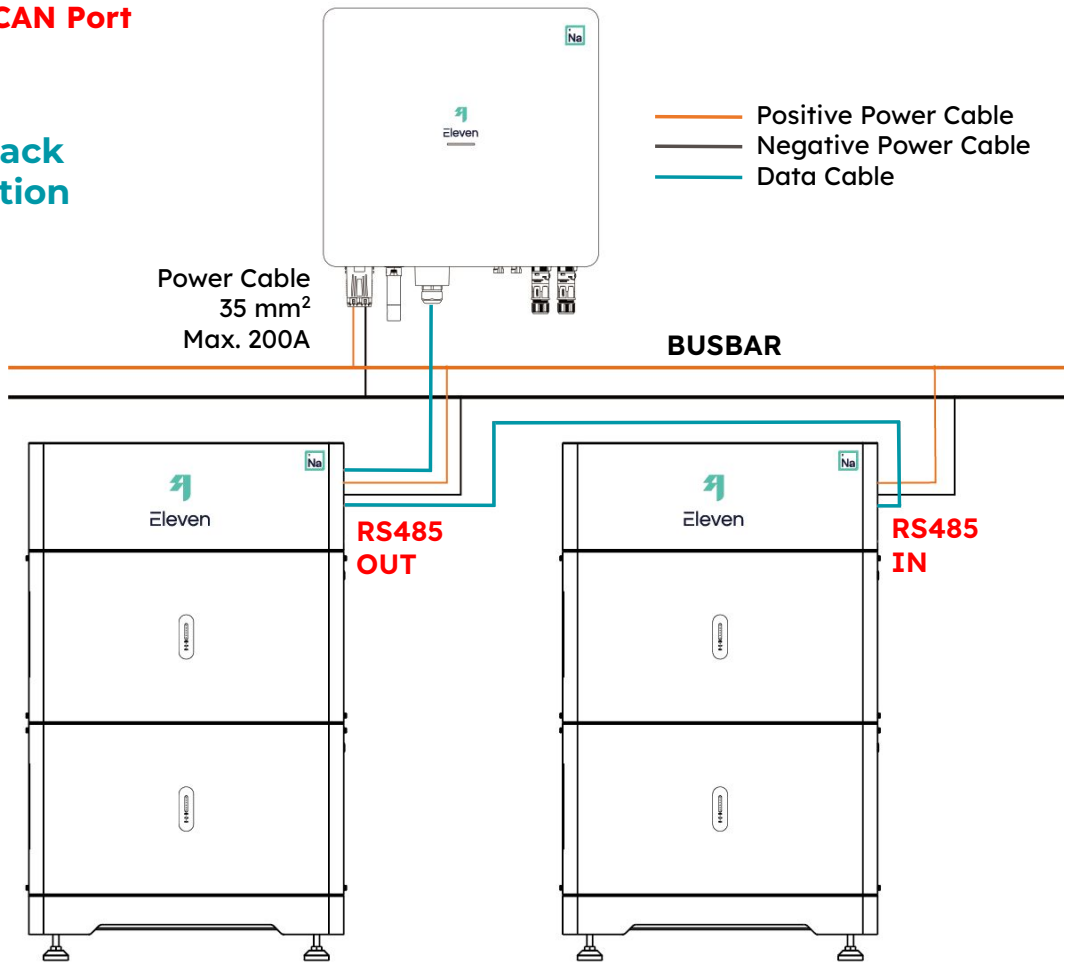

Startup / Shutdown & Indicator Lights

Startup

Press the **ON/OFF switch button** on each battery module to initiate start-up. Once the battery status indicator light turns on, move the **junction box circuit breaker** to the ON position.

Shutdown

Move the **junction box circuit breaker** to the OFF position, then press the **ON/OFF switch button** on each battery module.

		Charge						Discharge					
Indicator Light		L1	L2	L3	L4	L5	L6	L1	L2	L3	L4	L5	L6
Battery Capacity	0~17%	Off	Off	Off	Off	Off	Flash	Off	Off	Off	Off	Off	On
	18~33%	Off	Off	Off	Off	Flash	On	Off	Off	Off	Off	On	On
	34~50%	Off	Off	Off	Flash	On	On	Off	Off	Off	On	On	On
	51~66%	Off	Off	Flash	On	On	On	Off	Off	On	On	On	On
	67~83%	Off	Flash	On	On	On	On	Off	On	On	On	On	On
	84~100%	Flash	On	On	On	On	On	On	On	On	On	On	On
Running Light (RUN)		On						On					

If the Alarm light (**ALM**) is constantly on, it indicates an abnormal condition in the battery pack. This could be due to over-temperature, over-current, a short circuit, or reversed polarity in the power connections. Please turn off the battery pack and contact Eleven Energy immediately.

Galvani ELB-4.5-02

Sodium-ion Technology
Green & Sustainable Battery

High Charge / Discharge Rate
Single module: Up to 100A
Multi-module: Up to 160A

Wide Operating Temperature Range
-20°C - 55°C

Flexible Installation Location
Indoor or Outdoor

Expandable Capacity
Up to 16 battery modules can be connected to provide 66.24 kWh of usable capacity.

Specifications

Battery Type	Sodium-ion
Capacity	4.5 kWh
Max. Charging / Discharging Current	Single module: 100A / 100A Multi-module: 160A / 160A
Rated Voltage	45 V
Operating Voltage Range	33V - 59.2V
Depth of Discharge	92% on-grid / 95% off-grid
Charging Temperature	-20°C - 55°C
Discharging Temperature	-30°C - 55°C
IP Grade	IP65
Humidity Range	5 ~ 95%
Dimensions (W x H x D)	Battery Module: 640 x 350 x 250 mm Junction Box: 640 x 220 x 250 mm Base: 640 x 95 x 250 mm
Weight	Battery Module: 59 kg Junction Box: 11.5 kg Base: 6 kg
Interface	RS485 / CAN
Standard	EN IEC 61000-6, EN IEC 62619
Product Warranty	10 Years